TERMALICA®
beton komórkowy

TERMALICA

CONSTRUCTION SYSTEM

BRUK-BET®
Wyroby dla domu, ogrodu i drogownictwa

Termalica System = energy-efficient construction

Why is it worth building with the Termalica system?

TERMALICA is the healthiest wall material
- Made of natural raw materials: sand, lime and water
- The lowest rate of radioactivity
- High water vapor permeability - „breathing" walls
- It prevents the developments of mould and fungi

High thermal insulation
- Lower home heating costs
- Warm single-layer walls
- Saving on the thickness of thermal insulation

Low cost of 1 m² of wall
- Only 6.67 blocks per 1 m²
- Short construction time and lower labor costs
- A single-layer wall without insulation costs
- Low consumption of bedding mortar, tongue-and-groove joints
- Even and smooth walls - saving on internal plasters
- No need for plastering under wall tiles
- Easy cutting of blocks and preparing installation grooves

Building with the TERMALICA SYSTEM

House construction in a specific construction system brings many benefits. First of all - it facilitates the installation of individual elements, secondly - it reduces costs and significantly accelerates the construction implementation.

Building with the Termalica system makes it possible to obtain a homogeneous building structure. The individual elements of the system are perfectly matched to each other and provide high parameters in the field of thermal insulation.
The Termalica construction system consists of cellular concrete blocks, ready-made window and door lintels, floor elements and supplementary materials. The complexity of the system is also ensured by shuttering and masonry blocks, as well as concrete blocks used for the construction of foundation and basement walls.

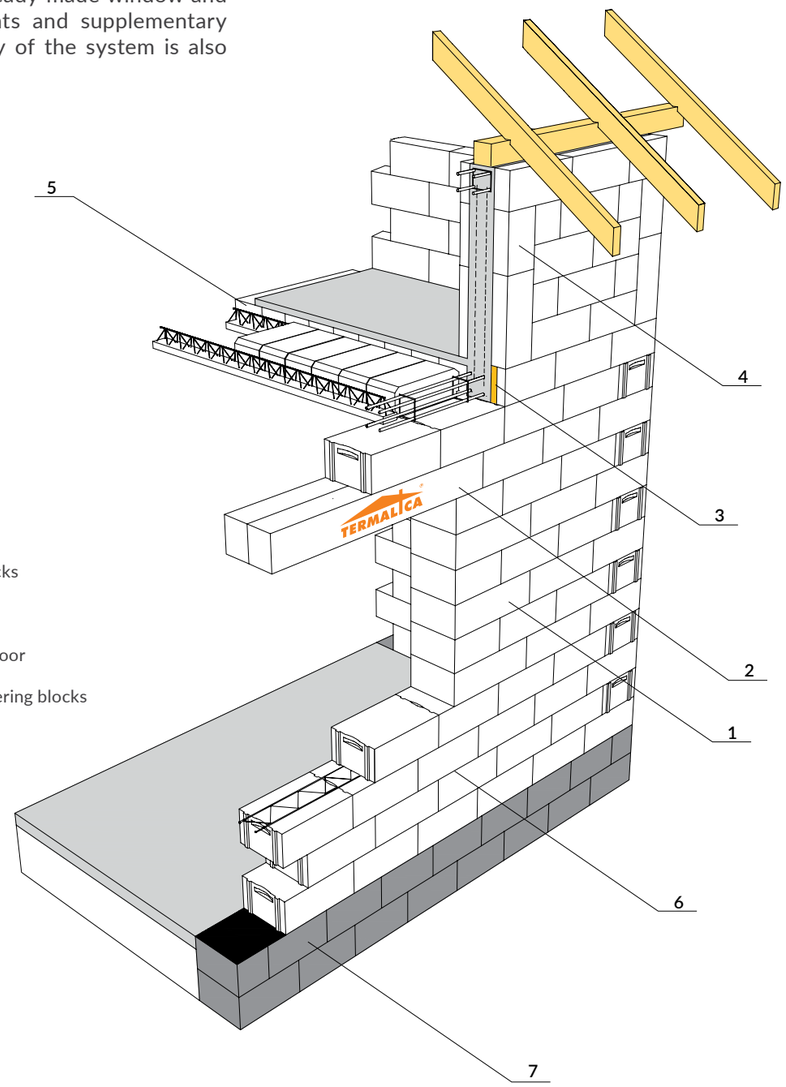

1. Wall made of TERMALICA blocks
2. TERMALICA lintel beam
3. Element of tie beam insulation
4. U-fitting
5. TERMALICA beam and block floor
6. TERMALICA thin-layer mortar
7. Foundation wall made of shuttering blocks

Fig. 1. Elements of the Termalica system

Termalica blocks have fixed, planned and optimized dimensions: 249 mm of height, 599 mm of length and width from 5 to 48 cm. The use of blocks per 1 m2 of wall is only 6.67 pieces. The comfort of bricklaying is additionally facilitated by ergonomic mounting brackets and tongue-and-groove joints, which significantly shorten the time of erecting wall.
Termalica blocks are manufactured in the highest class of TLMB dimensional accuracy with maximum deviations of ± 1 mm of height and ±1.5 mm in length and width. Thanks to the exact dimensions, the blocks are joined in horizontal joints by means of the Termalica thin-layer adhesive mortar, which is 1÷3 mm thick. Vertical joints do not require mortar adhesion due to the tongue and groove profiling. The use of thin-layer mortar provides us with
a homogeneous wall surface and does not reduce thermal insulation.
With Termalica blocks, we can erect walls in single-layer technology without the need for additional insulation as well as multi-layer insulation.
Single-layer walls are made of blocks of the lightest Termalica varieties - 300, 350 and 400, which are 48, 40 and 36.5 cm thick.
Single-layer wall is featured by short time of execution and guarantees high parameters of thermal insulation. The warmest single-layer wall in the Termalica system with a 48 cm thick block provides an excellent heat transfer coefficient -
U = 0.173 W/m²K.
Double-layer walls consist of a structural supportive part, usually made of 500, 600 and 700 Termalica blocks with a thickness of 20 and 24 cm, and thermal insulation layers made of rock wool or styrofoam panels with the thickness of 12÷15 cm.
Three-layer walls additionally have a protective layer, which is 9÷12 cm thick, made of cellular concrete blocks or ceramic bricks. In the case of
a clinker brick façade, a ventilation gap of 3÷4 cm is required between the insulation and the casing layer.
The walls made of Termalica blocks form even and smooth walls, which inside is finished with plasters and coats with a thickness of approx. 5-10 mm, and on the exterior part is covered with traditional mineral or thin-layer decorative plaster. The smooth surface of walls made of masonry blocks for thin joints enables direct laying of ceramic tiles in bathrooms and kitchens without the necessity of prior plastering and smoothening the walls. The ease of making grooves and bore holes in cellular concrete walls using simple tools such as a stylus significantly reduces labor costs and accelerates the laying of electrical cables, heating and plumbing installation.
The cellular concrete walls are featured by high vapor permeability, which has a beneficial effect on the indoor microclimate and the lowest radioactivity among all masonry materials. In addition, cellular concrete has antiseptic properties, i.e. prevents the development of mold and fungi on the wall surface. The partitions erected with Termalica blocks are completely non-flammable and provide high fire resistance.

Foundations and basement walls

Concrete strip footings and steel-reinforced concrete strip footings are the most popular method of construction of foundations of single-family houses, both without basement and those with basements. Foundation footings in the building without basement should be located at a depth below the ground freezing zone,
i.e. from -0.8 to -1.4 m.
Before erecting the foundation walls, on the footings the horizontal damp proof membrane should be laid. The insulation is made of two layers of waterproofing felt with a water-based emulsion of asphalt and rubber or a layer of
torch-on membrane for foundations.

Basement and foundation walls can be made as monolithic concrete walls with the use of shuttering hollow blocks or made of concrete blocks and foundation hollow bricks.
We lay the shuttering blocks based on „the dry method" without using the mortar, maintaining the appropriate offset of vertical joints in individual layers. In the event of any unevenness of the foundation footings, the shuttering blocks can be levelled by bricking the first layer on cement mortar.

Depending on the height and anticipated loads, we can reinforce the walls made of shuttering blocks with two ø10 mm rods and vertically, using the created ducts, to which we put reinforcement consisting of three ø10 mm rods joined by stirrups. At the top of the last layer of hollow bricks it is recommended to lay two ø12 mm rods longitudinally, which after concreting will form a reinforced concrete tie beam. In the case where the height of the hollow brick layers is below the designed level of the upper foundations, we make additional formwork of boards at the highest layer. We concrete walls made of shuttering block after making 3-4 layers with C16/20 class concrete. During concreting, the mixture should be vibrated to fill blocks properly.

The BF-25/38 concrete foundation block is used for the construction of single walls with thickness of 25 and 38 cm, or layered walls in the 25 cm arrangement + thermal insulation + 12 cm for three-layered diaphragm walls. Blocks are laid on the M5-M8 cement-based mortar, on a full horizontal and vertical joint with a thickness of 10-15 mm.

The PF-24 concrete foundation block is used for the erection of foundation and basement walls, which are 24 cm thick, located above the level of groundwater. Concrete hollow block is equipped with a full bottom facilitating the application of mortar and pockets for filling vertical joints. The hollow bricks should be laid on the horizontal and vertical joint using cement mortar. We lay the blocks with a full bottom up, evenly spreading the 10-15 mm thick mortar on it, while vertical joints are made traditionally or by filling the created pockets with mortar. Wall elements in subsequent layers must have a gap of at least 10 cm.

Insulation of foundation and basement walls

Foundation and basement walls need to be insulated with vertical and horizontal damp proof membrane. Vertical insulation is made on both sides of the wall by applying two layers of ready asphalt-rubber solutions or emulsions, in the case of unfavorable hydrological conditions, heavier

bituminous coatings with a thickness of more than 4 mm should be used. Vertical insulation should be extended on the entire height of the foundation or basement wall and connected with the upper horizontal insulation.

Horizontal insulation of foundations, protecting overhead walls against capillary lift of moisture, can be made of two layers of waterproofing felt bonded with a water-soluble asphalt-rubber emulsion, a special foundation polyethylene film or a layer of torch-on membrane.
Horizontal insulation should be wider inward than the wall by approx. 15 cm and be connected in a continuous manner with damp proof membrane of floor layers. After waterproofing the walls, external insulation, made of XPS extruded polystyrene boards with a thickness of 5-10 cm, should be glued.

The first layer of wall

When starting bricklaying, the first layer is the most important. The accuracy of laying the first layer of Termalica blocks has a significant impact on bricklaying of subsequent wall layers.

Using the leveler or the water level we find the highest corner of the foundation. The difference in the height of individual corners should not be greater than 30 mm, and in the case of larger differences, the foundation must be leveled with a cement subfloor. In order to overcome the unevenness of the foundations, the first layer blocks are placed on a cement-based mortar, prepared with cement and sand in a ratio of 1:3 and a consistency customized so that the blocks do not settle under their own weight.

We start bricklaying of external walls at corners, laying individual blocks in the corners of the building. It is best to arrange the blocks so that the tongues are directed outwards, and after sanding we obtain
a smooth surface of the corner. The horizontal and vertical setting of the blocks is controlled by means of a spirit level and corrected using a hammer with a rubber head. After hitting with a hammer, we are sure that the mortar will adhere to the block over the entire surface.
Then, between the correctly laid corner blocks, stretch the rope, which sets an even wall face

and complement the first layer.Termalica blocks equipped with a tongue and groove system are installed without filling vertical joints with adhesive mortar, whereas blocks with smooth front surfaces are laid on full vertical joints.
In the event that the building wall is not designed in accordance with the Termalica block length module, the layer should be complemented with It should be supplemented with the precise length-cut block.
Cut the last block using a hand-held circular saw and then level the cut surface with a plane or trowel. When inserting a matching block, remember to fill the joint with mortar in the place, where the cut and the whole block meet. Filled vertical joints are also made in wall corners, in which the face with the groove adheres to the side surface of the block, and in all meeting edges, where there is no connection of the tongue-groove blocks.

Bricklaying of subsequent layers of blocks

For laying subsequent layers of Termalica blocks, we proceed after binding cement mortar, i.e. after about 2-3 hours after laying the first layer. Thanks to the high dimensional accuracy of TLMB (±1 mm) Termalica blocks, subsequent layers can be laid with thin-layer bedding mortar. The block jointing system for tongue and groove joints without filling vertical joints with mortar, considerably accelerates bricklaying and reduces mortar consumption. Mounting brackets, which facilitate moving and laying blocks on the wall, should also be left unfilled.

Before starting the bricklaying, the upper surface of each previously-formed layer of blocks should be leveled. We can polish any unevenness using a trowel with a coarse scaleboard or planer. Dust generated during grinding should be removed from the blocks with a paintbrush or brush, so as not to weaken the adhesion of the adhesive mortar. Then prepare the Termalica adhesive mortar according to the instructions on the packaging. Bricklaying using Termalica mortar can be carried out at temperatures above 5°C. In winter and at low temperatures, mortar with Antigelo antifreeze additive should be used.
Thin-layer Termalica adhesive mortar is applied using a special serrated trowel adjusted to the width of the block. Properly profiled trowel teeth ensure uniformity of the thickness of the adhesive on the entire surface of the wall. One time, spread the mortar over a length of 3-4 blocks to prevent it from drying out prematurely. The thickness of the horizontal joint after laying and pressing the block should be 1-2 mm.

Always start bricklaying successive layers from the corners, in which the blocks are laid opposite to each other using a masonry bonding.

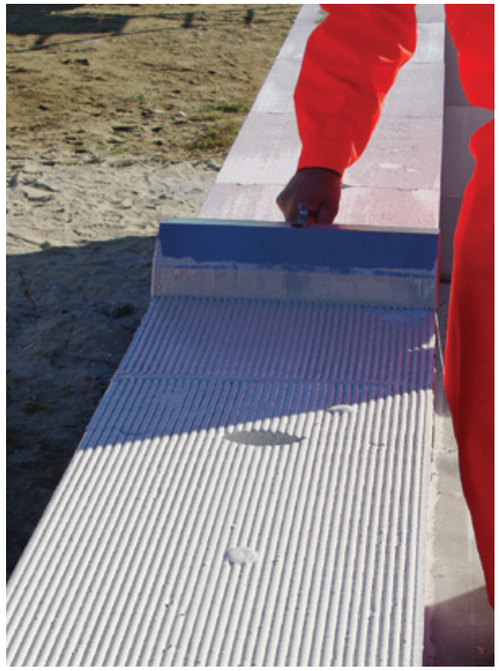

Then stretch the rope between the corners and fill in the remaining blocks of the layer. It is recommended that the external and internal construction walls are erected evenly with layers, without the so-called „stretching" corners. During bricklaying, pay attention to the blocks with a tongue-and-groove joint, if they were inserted from above, without any additional adjustment or horizontal adjustment, which would ensure the even adhesion of the blocks and thin vertical joints, 1-2 mm thick. The blocks should be bound in subsequent layers by moving the vertical joints at least 10 cm apart. Blocks laid on the edges of walls or at window and door openings should be at least 12 cm long.

Connecting external and internal load-bearing walls

External and internal load-bearing walls are recommended to be built simultaneously.
One-layer external walls made of Termalica blocks with a thickness of 48, 40 and 36.5 cm are connected to internal load-bearing walls by masonry bonding at incomplete wall thickness. In the first layer, the inner wall block is supplied to the external wall and connected by adhesive mortar to the wall. Then, in every second layer of the wall, insert the inner wall block to a depth of 15 cm in a properly cut block in the external wall. All smooth meeting edges of the blocks in the joint should be filled with adhesive mortar.

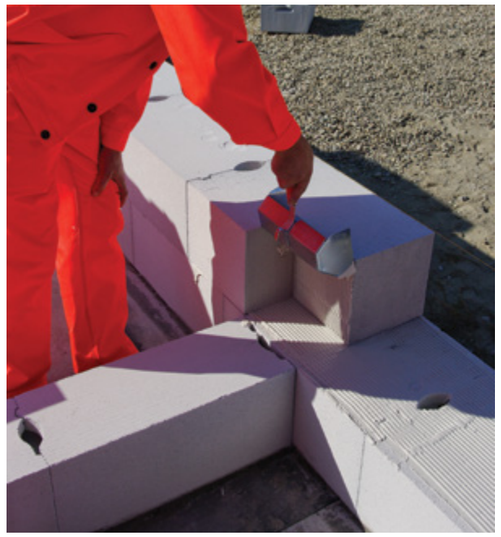

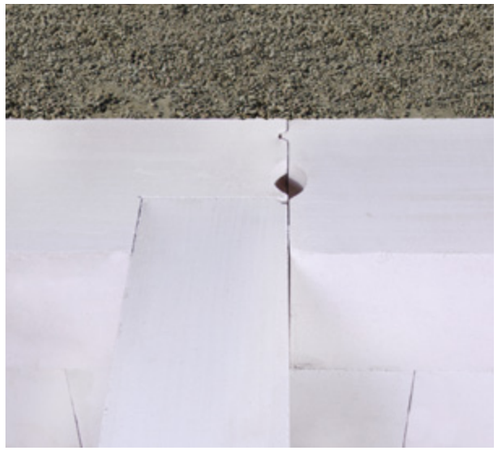

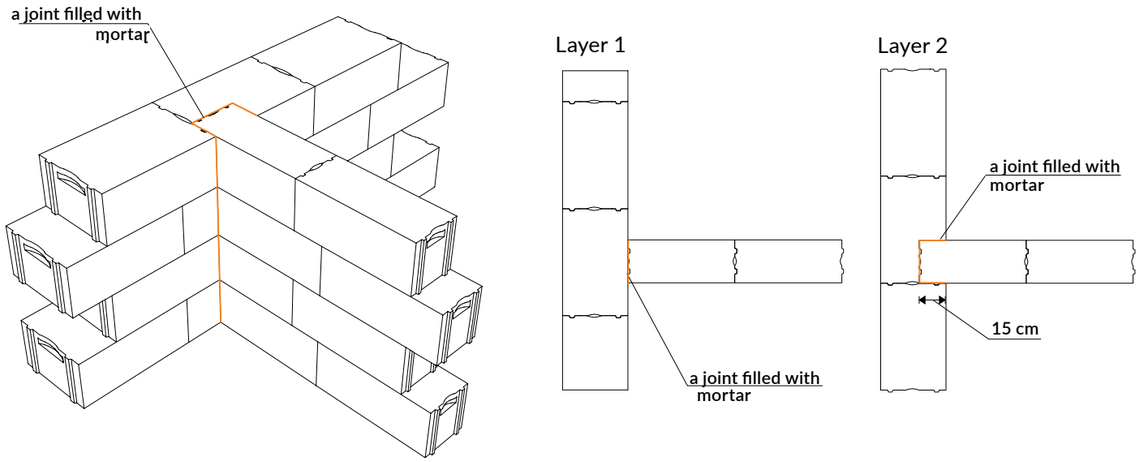

Fig. 2. Connection of an external one-layer wall with an internal wall

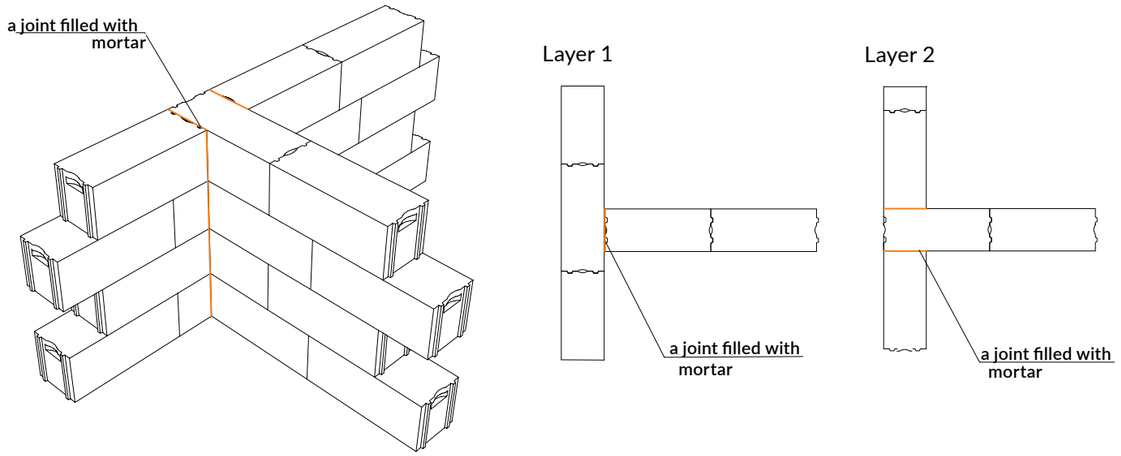

Fig. 3. Connection of the double-layered external wall with the internal wall

This combination of walls limits the creation of a cold bridge, caused by the greater thermal conductivity of the inner wall blocks.
In the case of two-layer external walls made of Termalica blocks, 24 or 30 cm thick, insulated with styrofoam or mineral wool, the connection with the internal load-bearing wall should be made through a traditional masonry bonding on the entire thickness of the wall. The blocks are laid alternately in every other layer by inserting the internal wall block into the external wall.

Partition walls

Build partition walls with Termalica blocks with a thickness of 10 or 12 cm, usually after building external and internal load-bearing walls. The connection of partition walls with structural ones is made with the use of stainless steel LP30 fittings, at a minimum of 4 pieces at the level of the storey. The location of partition walls should be determined already at the stage of building load-bearing walls, based on the design documentation.

When bricklaying load-bearing walls, along the course of partition walls, in every second or every third joint, lay the LP30 flat fitting, so that half of the fitting extends into the partition wall. Next, when bricklaying a partition wall, add blocks and immerse the LP30 fitting into the adhesive mortar of the horizontal joint.
If the position of the partition wall is different from the one previously designed or if no metal anchors have been fixed in the main walls, the connection of both walls is made using L-shaped L30 fittings, pounded down to the blocks with nails or rawlplugs.

Before starting the construction of partition walls, in the place of their foundation, insulation made of building felt or foil should be laid, with a width of the strip larger by 30 cm than the wall thickness.

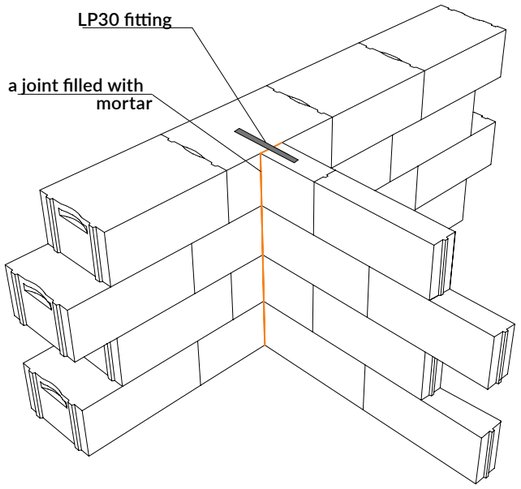

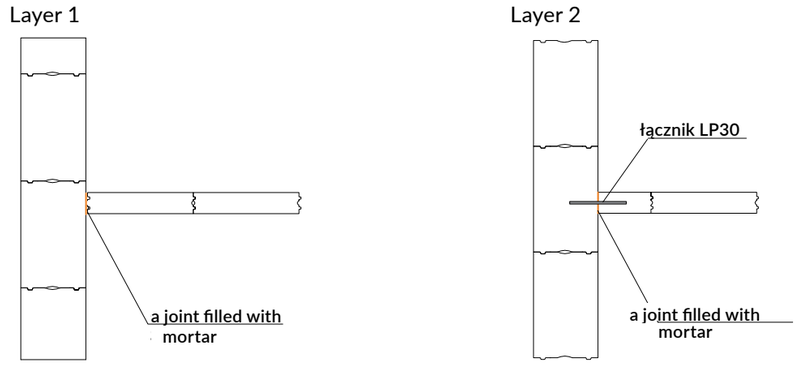

Fig. 4. Connection of partition walls with load-bearing walls

Put the first layer of blocks on a regular cement mortar, aligning it to the level of the load-bearing wall.
Add blocks of partition wall to the load-bearing wall, applying the adhesive mortar to the vertical edge of both walls. After stabilization of the first layer blocks, grinding and removal of dust, start to build blocks of successive layers on the Termalica thin-bed mortar, remembering about bonding of elements in the layers with a gap at least 10 cm.
A gap of 1-2 cm must be left between the floor and the partition wall, which is filled with polyurethane assembly foam.

Reinforcement under window openings

There is an unfavorable stress distribution in the windowsill zone, which can cause scratches under the windows. Scratching the wall can be prevented by appropriate strengthening of the wall structure, using reinforcement in the support joint under the window.

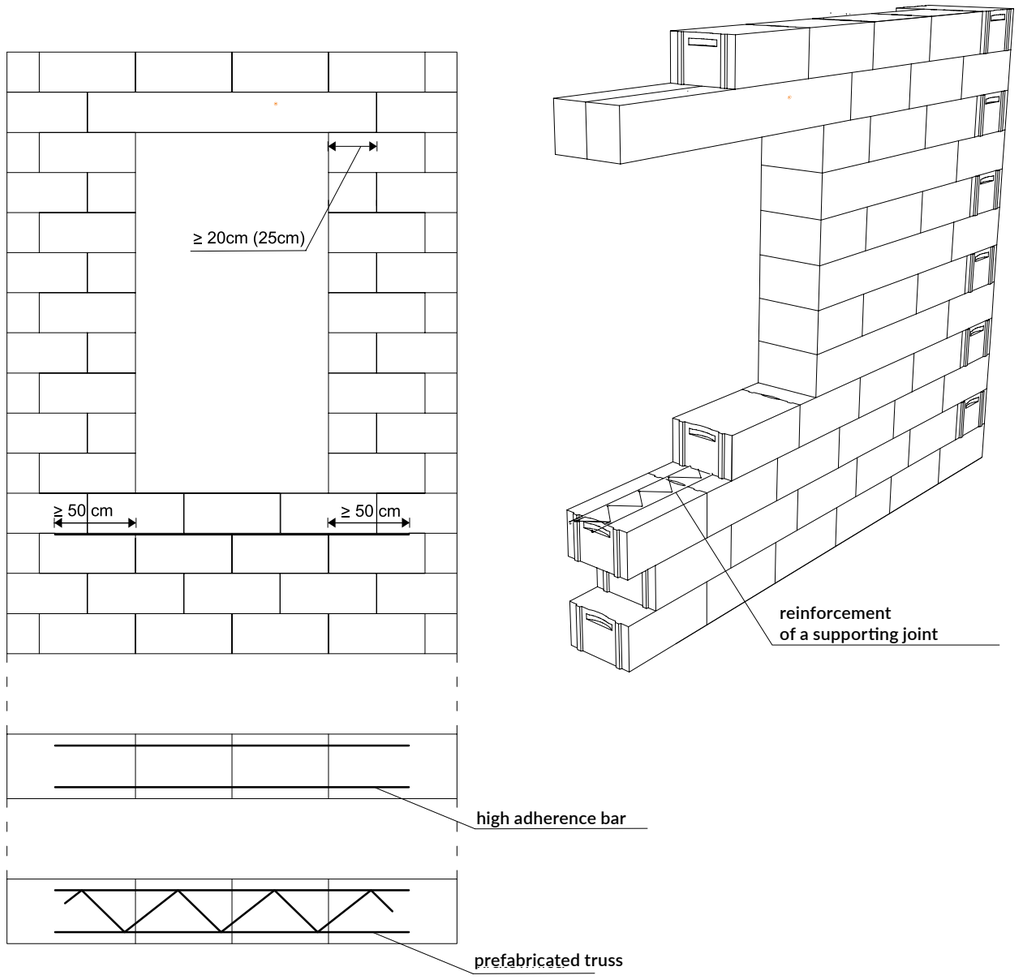

Fig. 5. Reinforcement of the windowsill zone

We can make reinforcement of prefabricated flat trusses (e.g. Murfor), which should be placed in the thin-bed mortar under the last layer of blocks in the window. To do so, set the location of window opening on the wall, apply the Termalica adhesive mortar, push the reinforcement into the truss joint and re-coat with the mortar during laying the blocks.

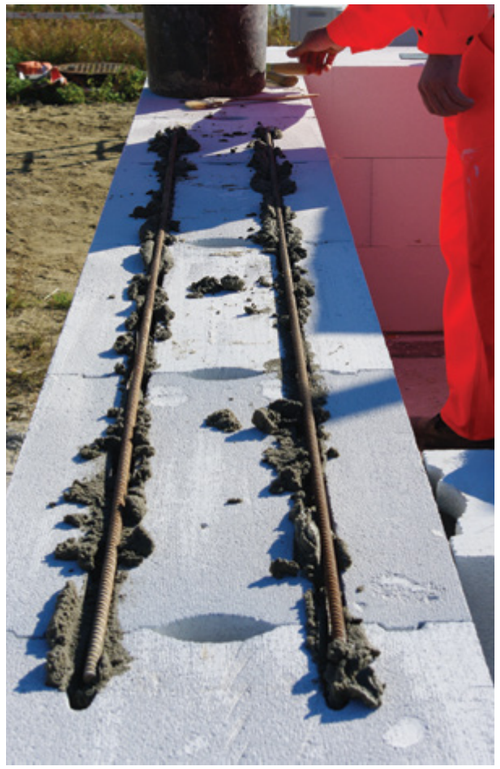

Another way to reinforce the windowsill layer is to lay two ø8mm high adherence bars in grooves filled with cement mortar. Grooves of depth of approx. 3 cm are easiest to make with the stylus by dragging it along the wooden patch nailed to the wall. Then fill the grooves with cement mortar and embed the reinforcing bars in them.
Regardless of the solution used, the reinforcement of the supporting joints should be extended beyond the edge of the window opening by at least 50 cm on each side.

Preparation of lintels

Lintel elements made of the Termalica cellular concrete are used to bridge window and door openings. Together with other elements of the system - blocks and tiles - they form a homogeneous wall structure and reduce the formation of cold bridges.

Lintels in the Termalica system can be made with prefabricated reinforced beams or U-fittings.

The Termalica system produces three types of reinforced lintel beams with TNN, TNB and TND markings. Lintel beams are laid individually or in sets adjusted to the thickness of the bricked wall. The beams should be supported on the wall and joined together along the length with Termalica adhesive mortar. Depending on the span of the

hole, the minimum length of support on the wall on each side is:

- 20 cm for the opening's width ≤ 1.00 m
- 25 cm for the opening's width ≥ 1.00 m

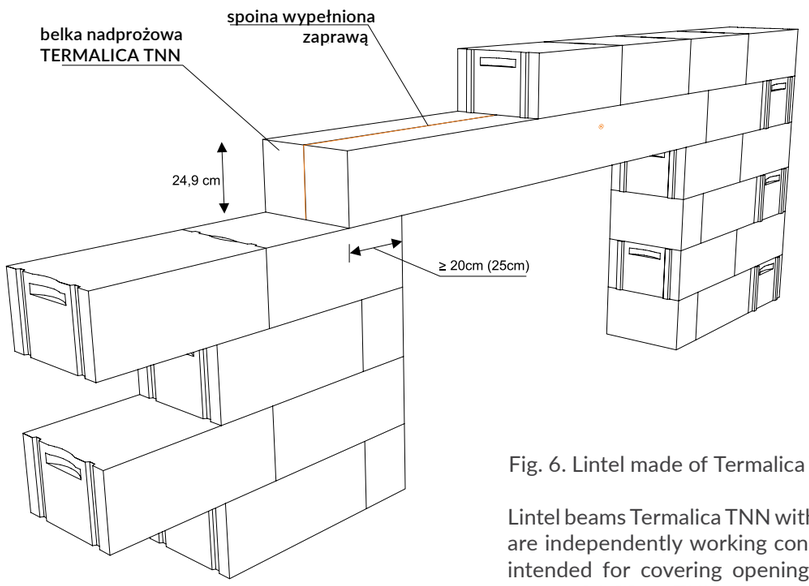

Fig. 6. Lintel made of Termalica TNN beams

Lintel beams Termalica TNN with a height of 24.9 cm are independently working construction elements, intended for covering openings with a maximum width of 1.80 m. TNN beams, after being mounted on the wall, constitute a ready load-bearing lintel.

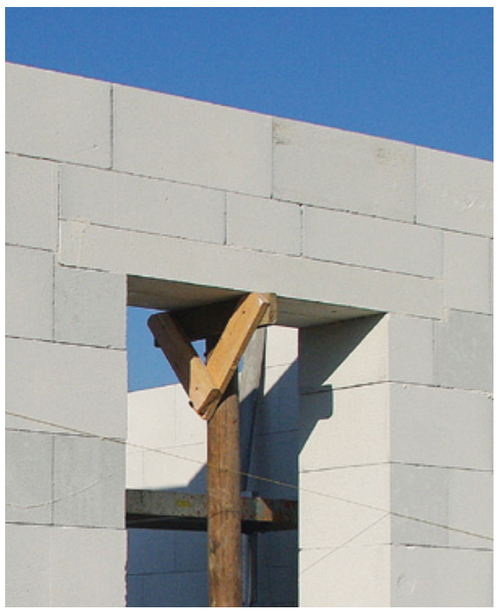

Termalica TNB beams with a height of 12.4 cm are elements intended for making composite lintels, in which beams structurally cooperate with the wall laid on them. The maximum width of the bridged hole is 2.50 m. The full load-bearing capacity of the composite lintel is obtained after laying the beams with a layer of blocks and making a reinforced concrete ring beam in the floor level. It is important that the blocks over the beams are laid with filled vertical joints. If the superstructure is made of blocks profiled with tongue and groove, it is recommended to sand down tongues and fill the vertical joint with a thin-bed mortar. In the case of standard 1.5 m window woodwork, TNB beams can be overlaid with special Termalica 12.4 cm supplementary blocks, which will align the lintel to the 25 cm layer height module. TNB lintels require mounting support with spacing of approx. 0.75 m, which can be removed after 7 days from setting floor in concrete.

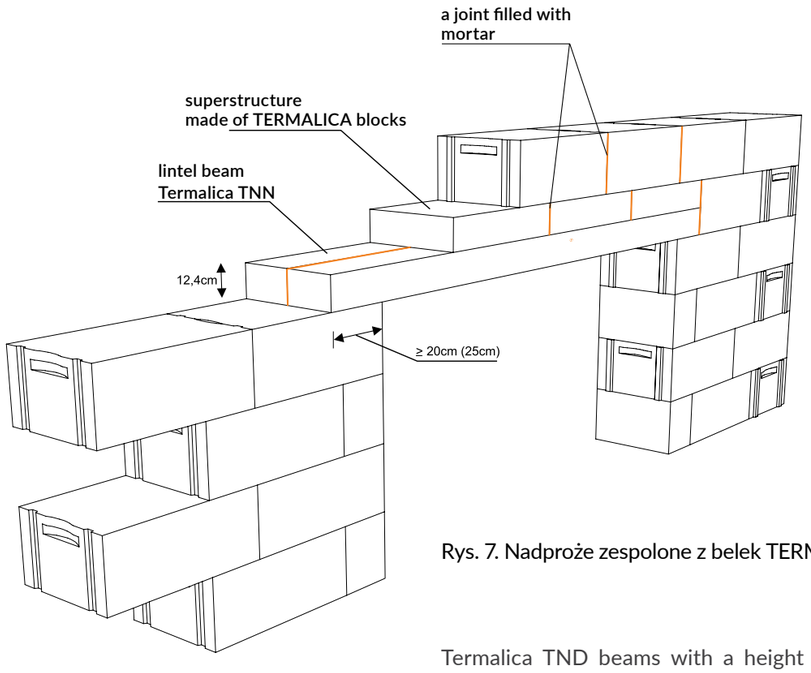

Rys. 7. Nadproże zespolone z belek TERMALICA TNB

Termalica TND beams with a height of 24.9 cm, these are non-load-bearing structural elements, designed to make lintels in partition walls with a thickness of 10 cm. When assembling, the beam should be supported in the middle of the span and rebuilt with blocks with filled vertical joints.

Termalica U-fittings function as a lost form of formwork and allow to cover window and door openings with large widths, such as terrace windows and garage doors. The single-sided U-shaped wall ensures adequate thermal insulation of the lintel and does not require additional thermal insulation.

Preparation of the lintel starts with installing a stable support made of the board within the window opening, where then U-fittings are laid, using a thin-layer mortar.

The minimum supporting length of the fittings on the wall is 25 cm per side. Extreme U-fittings laid on both sides of the opening should be elements of the full length - 59.9 cm.
Then, in the U-shapes, the structural reinforcement

of the lintel is laid, the inner part of fittings is moistened with water and filled with C16/C20 (B20) class concrete. In the case of openings with a large span and the necessity to make a supporting beam with increased dimensions, with U-fittings the thicker wall can be properly cut and build up with Termalica blocks with a thickness of 7.5 cm to the required height. In such a lintel, a thermoinsulating insert made of wool or styrodur, 3 ÷ 4 cm thick, should be additionally used to preserve heat.

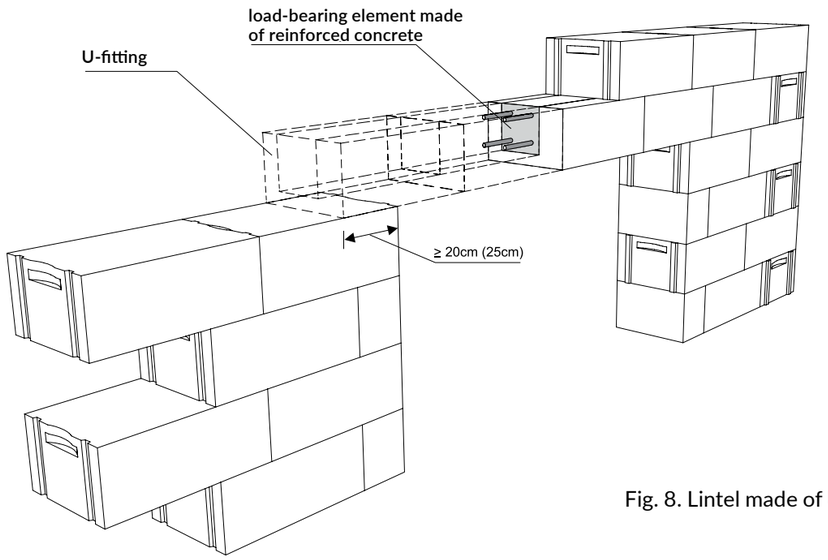

Fig. 8. Lintel made of U-fittings

Thermal insulation of the floor ring beam

When laying single-layer external walls made of Termalica blocks, it is necessary to remember about thermal insulation of all reinforced concrete elements, such as wall cores and floor ring beams.
The insulation of the floor ring beam is made of Termalica blocks with a thickness of 7.5 or 10 cm and ready-made mineral wool panels with
a thickness of 5 cm. The blocks are laid on the external part of the construction wall, and from the inside they are glued on the mortar of a thin-layer mineral wool panel.

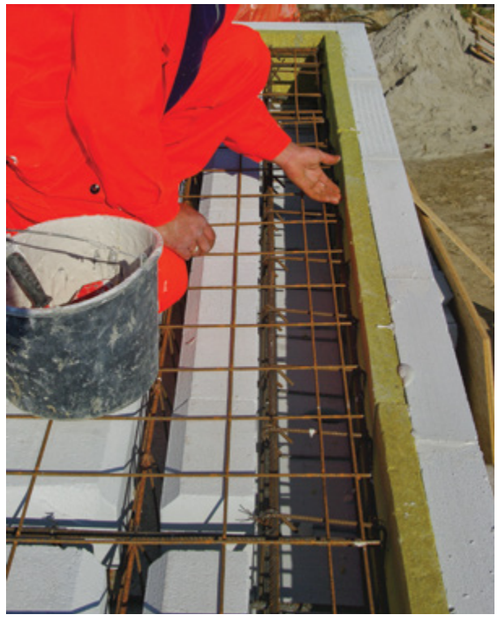

The laid elements of insulation create simultaneously the lost formwork for the tie beam, which is embedded in concrete with the floor structure.

Knee wall

The knee wall is a structural element of the building on which the wooden roof truss rests. A knee wall with a height of 0.5÷1.5 m is usually reinforced with vertical reinforced concrete shear connectors and with a horizontal tie beam to which the wall plate is anchored.

1. U-fitting
2. Element of tie beam insulation
3. TERMALICA floor
4. Tie beam of the knee wall
5. Ceiling beam
6. Wall plate

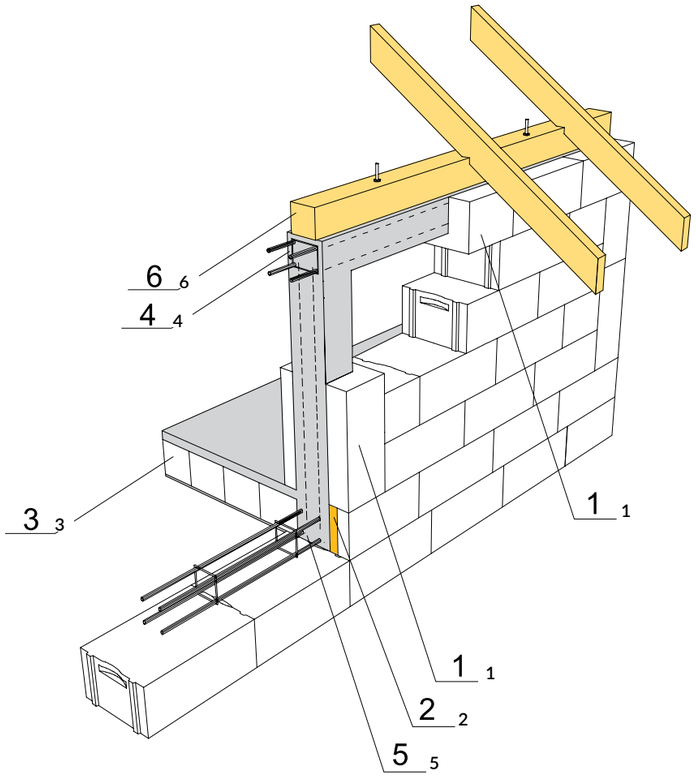

Fig. 10. Knee wall

In the single-layer external wall, vertical cores and reinforced concrete beams are most easily made with Termalica U-fittings. U-fittings are wall-mounted in an upright position covering the reinforcement of shear connectors coming out of the lower tie beam. The U-fittings should be set with a thicker wall to the outside and should be joined with the remaining blocks using a thin-layer

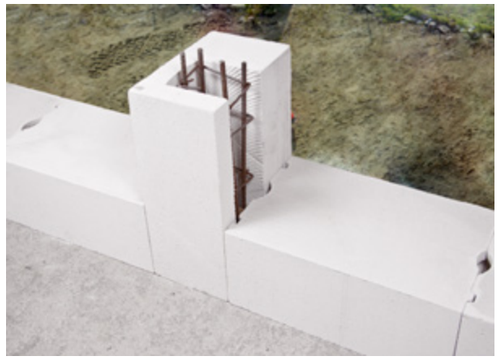

mortar.The last upper layer of the knee wall is also laid with U-fittings, cutting the openings in the place where the reinforcement of tie beams and shear connectors is joined. Next, install steel „pins" to anchor wall plates and fill studs and the tie beam with concrete.

Filling cavities

Cavities in the wall and holes left by the mounting brackets can be filled with Termalica thin-layer mortar mixed with the dust formed during the cutting of blocks or with the thermal insulation mortar. Vertical gaps up to 3 mm thick should be filled with polyurethane mounting foam and bonded with mortar on both sides.

Installation

In the walls made of Termalica blocks, providing installation of the building is an easy and effort-less activity. Vertical and horizontal grooves are best done using a stylus, dragging it along the lines or battens nailed to the wall. Openings for pre-wall connectors and electrical sockets are drills using a special flat drill bit. For drilling opening within Termalica blocks, use a drill without impact.

TERMALICA FILLING WALLS

Filling walls in frame constructions are mainly loaded with horizontal forces and dead load. Joints of the filling walls with the supporting structure must take over loads from the wind as well as forces resulting from deformations of adjacent construction elements.

1. Filling wall made of TERMALICA blocks
2. Reinforced concrete load-bearing structure
3. LK2 brickwork fitting

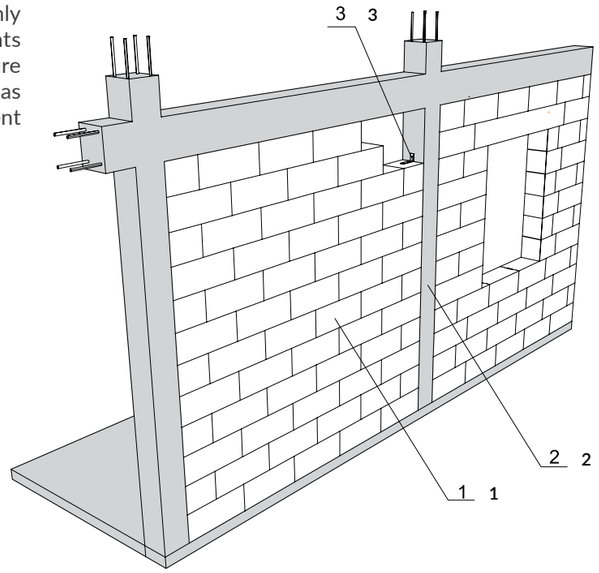

Fig. 11. Filling wall TERMALICA

Filling walls made of Termalica blocks should be combined with a reinforced concrete or steel frame along vertical and horizontal edges. Depending on the requirements, the connections can be stiff or flexible.
Stiff connections can be used for small filling surfaces and when large changes in the shape of the wall or adjacent load-bearing structure are not expected. Stiff connections are obtained by filling the joints with cement mortar and fixing the anchor fittings.
Flexible connections should be used in buildings with low stiffness for horizontal loads such as steel halls and framework reinforced concrete systems without stiffening walls.
Flexible connections are made by filling the joint with a deformable material, such as mineral wool, styrofoam or polyurethane foam, and using fittings to compensate of movements. In the case of fire separation walls, where tight fireproof joints are required, the joint filling should be made of mineral wool. Plaster on flexible joints should be cut and filled with acrylic render.
The connection of the lower edge of the filling wall is usually carried out by supporting the floor or beam on the layer of cement mortar. In order to limit the impact of structural deformations on the wall it is recommended to lay the wall on a sliding layer made of two layers of building felt or construction foil.

The vertical connection of the filling wall with a column or reinforced concrete wall is made using metal fittings, e.g. LK2, LP30 or LD3, manufactured by HABE.
The fittings are placed in every second or third joint of the horizontal wall, one part of the fitting is mounted with a nail to the block, and the other part is anchored with a self-cutting screw for concrete or a pin inserted to the column.
Another solution is to make a connection with anchor channel systems (e.g. HTA28/15 from HAL-FEN) embedded in a column or wall and with attaching of ML1 or ML wall anchors. During bricklaying, the flat bar anchors are embedded in the rails and pressed into the mortar in the joint of the horizontal wall, which results in the anchoring of the filling wall to the load-bearing structure of the building.
It is also possible to use the connection with high adherence bars of ø8 mm in diameter, laid in the wall joints and fixed on the adhesive mortar in openings drilled in reinforced concrete columns or walls.
= 20-25 mm i wypełnienie jej gęstoplastyczną zaprawą cementową wepchniętą w spoinę. W przypadku ścian o długości powyżej 6,0 m, a także przewidywanych znacznych obciążeniach

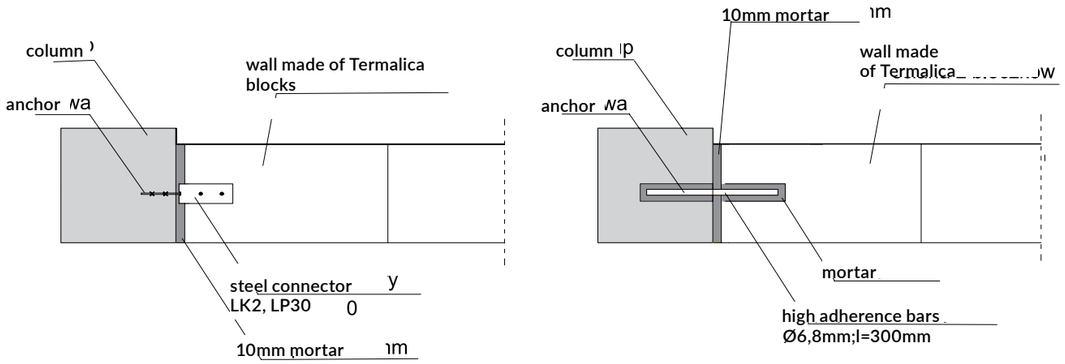

Fig. 12. Vertical stiff connections

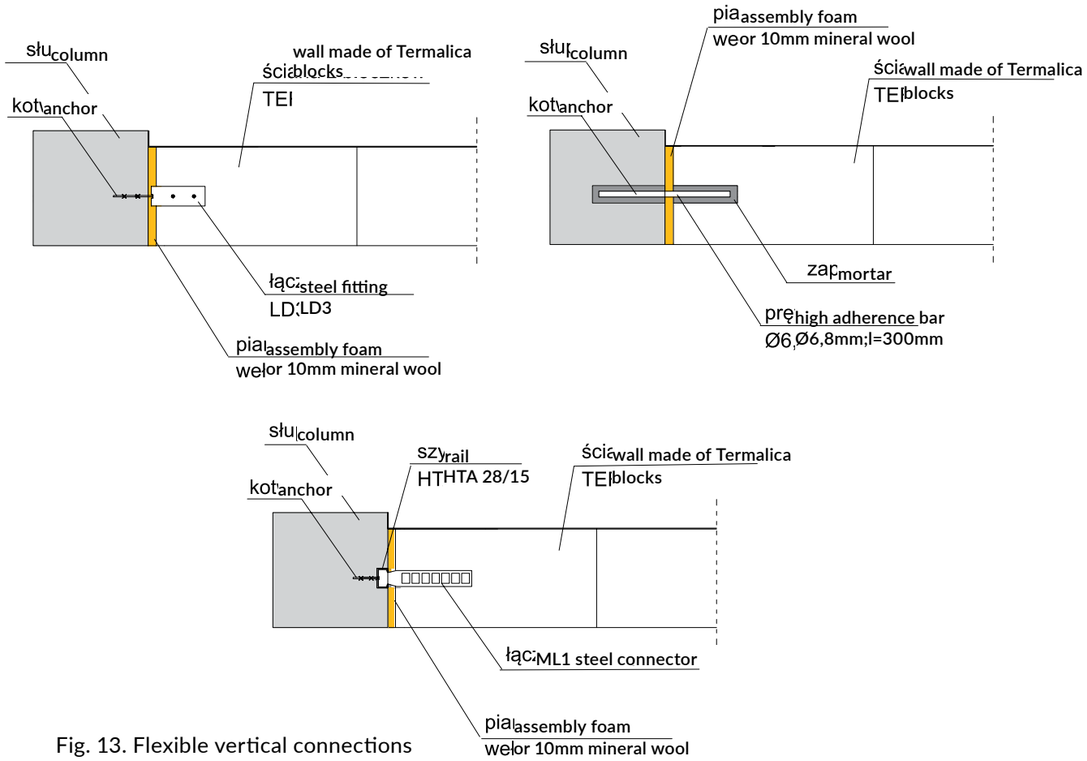

Fig. 13. Flexible vertical connections

The connection of the horizontal edge of the filling wall with the underside of the reinforced concrete beam can be made as stiff, leaving a 20-25 mm gap and filling it with a thick-bed cement mortar pushed into the joint. In the case of walls longer than 6.0 m, as well as expected heavy wind loads, it is recommended to support the wall in the middle part with steel angles fixed at one or both sides. Large areas of filling walls with a height of over 4.0 m or a length of over 6.0 m are recommended to be additionally reinforced with horizontal beams or vertical reinforced concrete cores in the spacing resulting from static calculations.

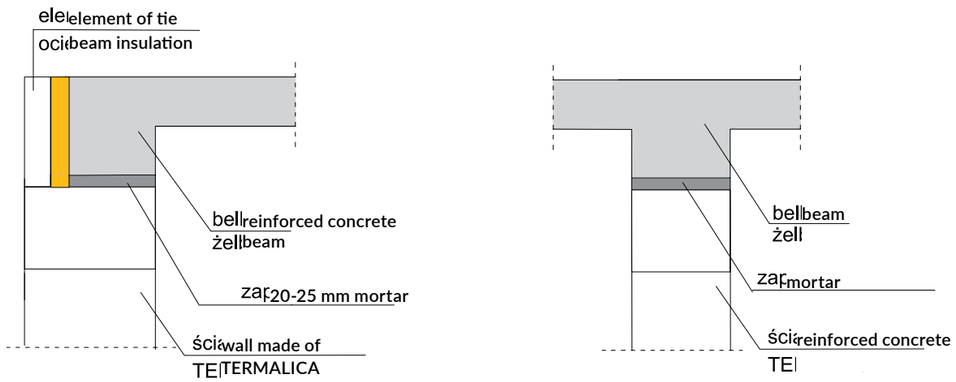

Fig. 14. Horizontal connection with a reinforced concrete beam

The connection of the horizontal edge of the filling wall with the bottom of the floor is recommended to be made flexible by leaving a 15-20 mm gap filled with polyurethane foam or mineral wool and using LDS, LD3 or LD1 expansion joint connectors. Another solution is to make one-sided or two-sided L50x50x3 wall support with mm galvanized steel angles. Partition walls up to 12 cm thick can be combined with the ceiling by filling the joint with the assembly foam.

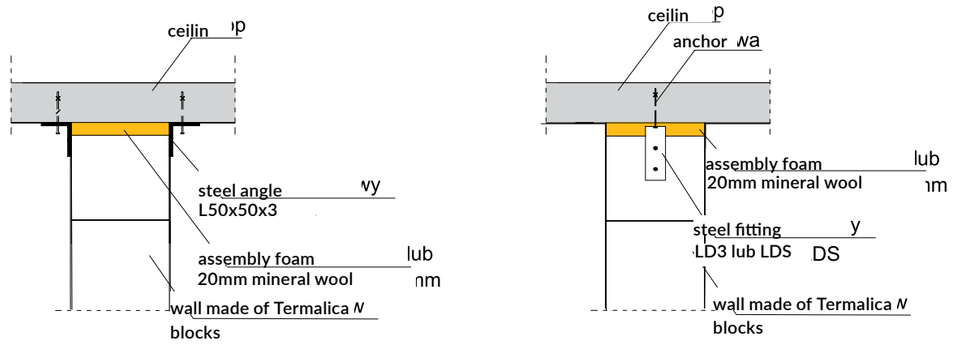

Fig. 15. Horizontal connection with a ceiling or beam.

Filling walls, which are perpendicular to each other are most often connected by masonry bonding or LP30 connectors fastened in every second or third wall joint.
Filling walls made of Termalica blocks can be laid with a thin-layer adhesive mortar with unfilled vertical joints in the case of tongue-groove blocks or with full vertical joints. During bricklaying, wall elements should be bound in subsequent layers by displacing vertical joints by min. 10 cm. At the edge of the window opening, the wall element should be min. 12 cm.

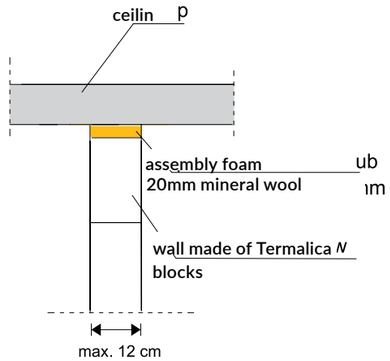

TERMALICA FLOOR AND ROOF SLABS

Large-size Termalica floor and roof slabs made of reinforced cellular concrete are intended for use in single- and multi-family housing developments, as well as in industrial and public facilities. Termalica slabs are manufactured with a thickness of 24 cm, a width of 60 cm and a maximum length of 600 cm. The use of prefabricated Termalica floor slabs and the elimination of formwork and assembly supports, significantly shortens the time of floor construction, in relation to other technologies and floor systems.

Using a crane and special mounting brackets, the floor slabs are laid on the construction walls with the layer of Termalica adhesive mortar. The minimum supporting length of slabs on the wall is 9 cm, while on a steel beam, it is 7.5 cm. In order to make the structure of the floor more monolithic in specially profiled longitudinal joints of slabs, reinforcement made of rods should be placed with a diameter of 8 mm (one rod in each joint) and anchored in the tie beams of reinforced concrete walls. The joint space should be filled with a concrete mix on C16/20 class fine aggregate (B20). In places where the chimneys or other technological openings pass through the floor, the replacement of steel on which the suspended floor slabs are supported must be made. In the case of partition walls located parallel to the Termalica floor slabs or supports of the roof structure columns, under the wall it should be built a reinforced concrete beam between separated slabs.
The floor made of Termalica slabs does not require technological breaks and can be loaded immediately after the assembly, which allows further bricklaying on subsequent storeys.

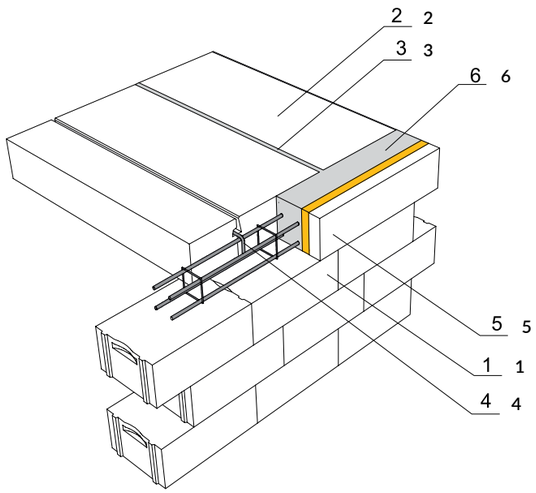

1. Wall made of TERMALICA blocks
2. TERMALICA floor slab
3. Concrete filling
4. Inter-slab reinforcement - ø8 mm rod
5. Element of tie beam insulation
6. Ceiling beam

Fig. 16. Floor made of Termalica slabs

Termalica reinforced floor slabs can be laid on the wall, reinforced concrete or steel structure, creating a flat or sloped roof construction.
The use of roof slabs in residential construction allows to give up traditional wooden roof trusses. The slabs are supported on the gable and transverse, load-bearing walls of the building. The minimum length of the slab support on the wall is 9 cm. Roof slabs are laid on the adhesive mortar layer.
In the case of mounting slab panels protruding beyond the gable wall, the slabs are supported on a reinforced-concrete tie beam, made with U-fittings. The slabs should be mounted with longitudinal bars to the anchors embedded in the tie beam. There should be assembly cuts made in the slabs, which are filled with concrete together with longitudinal locks.

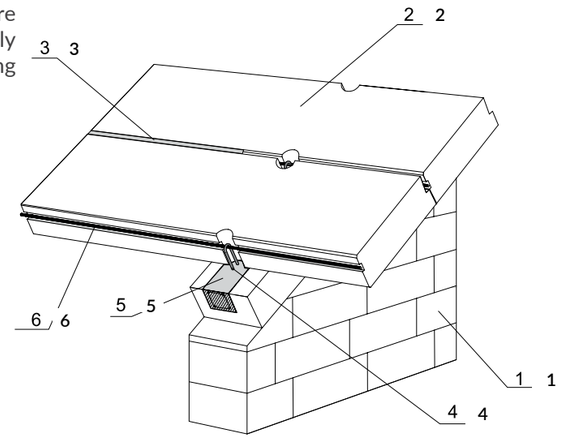

1. Gable wall made of TERMALICA blocks
2. TERMALICA roof slab
3. Concrete filling
4. Anchoring reinforcement - ø10 mm rod
5. U-shaped tie beam
6. Inter-slab reinforcement - ø8 mm rod

Fig. 17. Roof made of Termalica slabs

In the case of a non-dripping abutment of the roof slabs on the gable wall, the slabs are laid on the wall and then anchored with longitudinal rods in a reinforced concrete tie beam, insulated with mineral wool and cellular concrete tiles. Fill the longitudinal joints of the slabs during concreting the tie beam.

1. Gable wall made of TERMALICA blocks
2. TERMALICA roof slab
3. Concrete filling
4. Inter-slab reinforcement - ø8 mm rod
5. Element of tie beam insulation
6. Wall tie beam

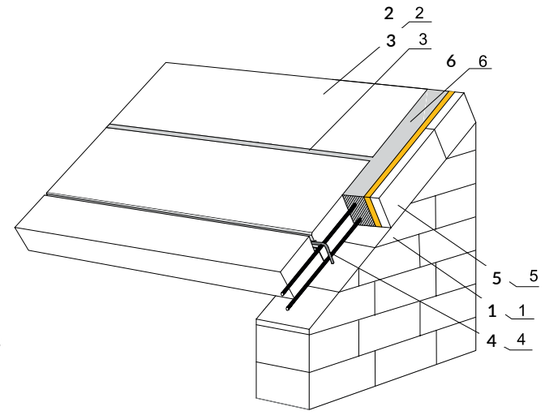

Fig. 18. Non-dripping roof made of TERMLICA slabs

Extreme roof slabs in longitudinal layout are supported on a specially shaped tie beam, which is made of reinforced concrete, on the knee wall. The tie beam on the knee wall must be recessed into the gable and transverse walls to a length of min. 1.5 m and insulated with mineral wool and cellular concrete tiles from the outside.
On the slabs the typical roof covering is laid on the boards: vapor barrier film, wooden counter-battens are attachedwith the cross-section of e.g. 5x15 cm between which thermal insulation is laid, then windproof foil, counter-battens and battens, covered with sheet or tile.
In the case of mullion and transom structure made of prefabricated steel or reinforced concrete elements, the slabs are laid on roof beams and mounted to the structure by means of special connectors or a system of anchor rods.
From the inside, the slabs can be plastered, lined with plasterboard or left unfinished (only painted), with a visible division into elements and filling of longitudinal joints with permanently plastic material.

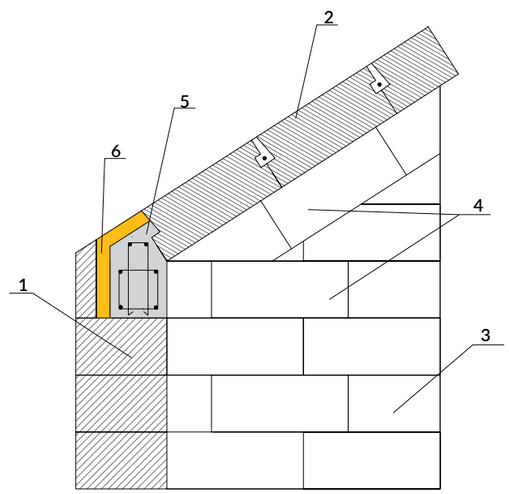

1. External wall made of TERMALICA blocks
2. TERMALICA roof slab
3. Transverse wall made of TERMALICA blocks
4. U-shaped tie beam
5. Tie beam on the knee wall
6. Element of tie beam insulation

Fig. 19. Supporting of Termalica slabs on the external wall

TERMALICA WALL PANELS

Large-format Termalica wall panels made of reinforced cellular concrete are intended for erection of external curtain walls and internal partition walls in industrial, retail and commercial buildings.
The reinforced Termalica wall elements are mounted to the supporting structure of the building made of prefabricated columns and reinforced concrete or steel columns. Depending on the designed construction solution, the panels can be mounted on the outside, inside or between the columns.

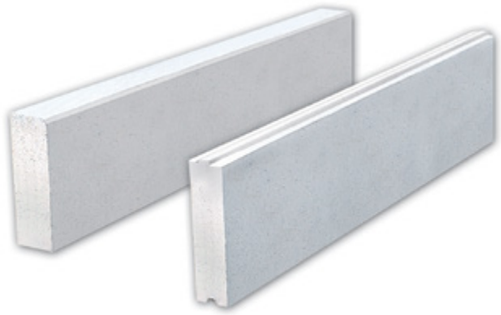

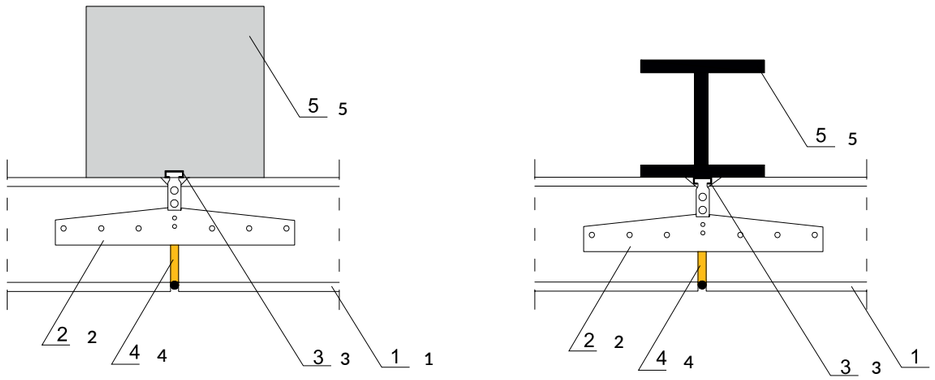

1. TERMALICA wall panel
2. Anchor connector
3. Anchor rail
4. Mineral wool
5. Column - load-bearing structure

Fig. 20. Connection of wall panels with a reinforced concrete and steel column

Wall panels are attached to the frame load-bearing structure by means of special fasteners and anchors, as well as mounting rails. Anchor channel systems (e.g. these manufactured by HALFEN) are anchored in the reinforced concrete structure during prefabrication and concreting of columns, whereas they are welded with the steel structure by sections located in the intended places of fixing the wall panels. Steel connectors are nailed to panels with special pins. Vertical joints between the panels are filled with mineral wool, PE rope and sealed with the permanently plastic grout. Horizontal joints between the panels are also filled with the flexible grout from the outside.

Tools and accessories in the Termalica system

Spreader
Tool for applying thin-layer mortar

Drill
Used for holemaking and punching in blocks

Levelling trowel
A tool for sanding walls made of 300, 350 and 400 blocks

Stirrer
For proper mixing of Termalica mortar

Scraper
A tool for sanding walls made of 500, 600, 700 blocks

Electric band saw
The device is used for precise and quick cutting of blocks

Hammer with rubber head
Tool for correcting the position of block

Circular saw
Hand saw for cutting blocks

LP30 connector for partition walls

Angle gauge
Facilitates accurate cutting of blocks

LDS floor connector for partition walls

Stylus
A tool for manual making of grooves in the wall

Joints' reinforcement
Reinforcement to the windowsill area of the wall

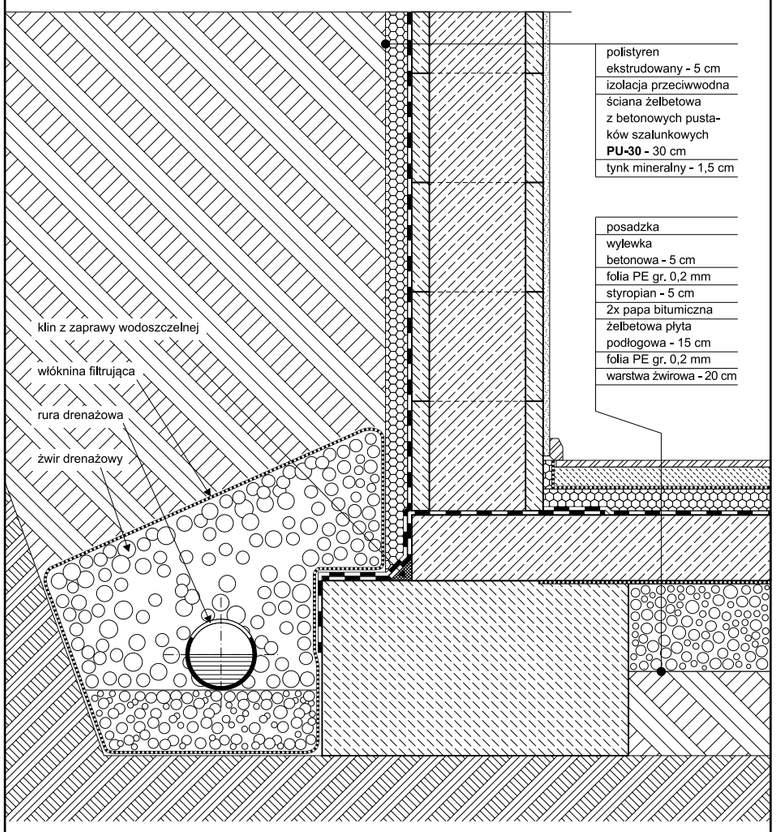

skala 1:10	PIWNICA Z ŻELBETOWĄ PŁYTĄ PODŁOGOWĄ I ŚCIANĄ Z PUSTAKÓW SZALUNKOWYCH	BRUK-BET TERMALICA
nr rysunku 1-03		

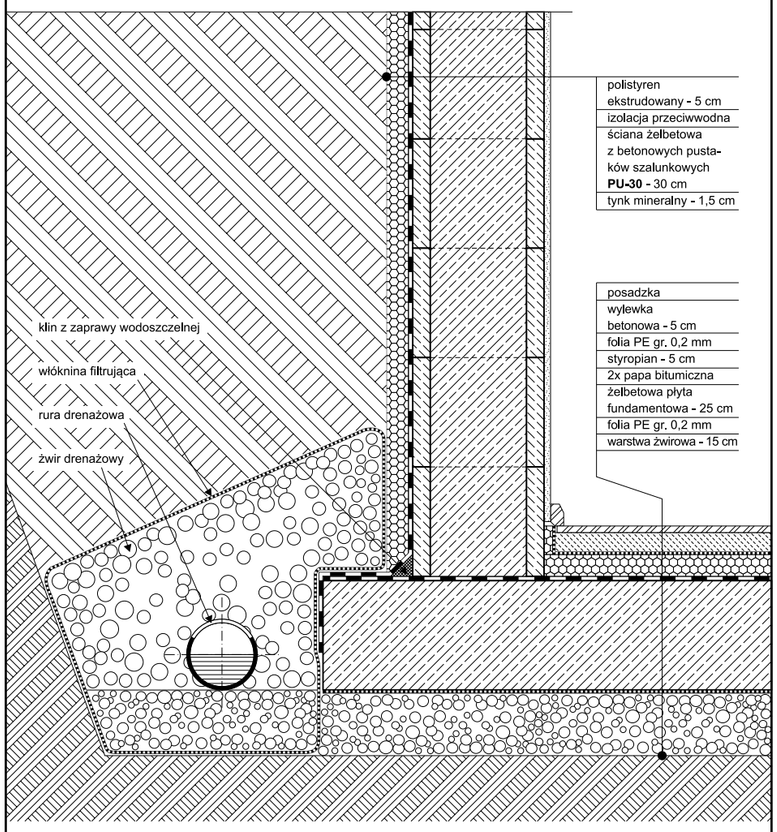

skala 1:10	PIWNICA Z ŻELBETOWĄ PŁYTĄ FUNDAMENTOWĄ I ŚCIANĄ Z PUSTAKÓW SZALUNKOWYCH	BRUK-BET TERMALICA
nr rysunku 1-04		

skala 1:10	PIWNICA Z BETONOWĄ PŁYTĄ PODŁOGOWĄ I ŚCIANĄ Z PUSTAKÓW SZALUNKOWYCH	BRUK-BET TERMALICA
nr rysunku 1-02		

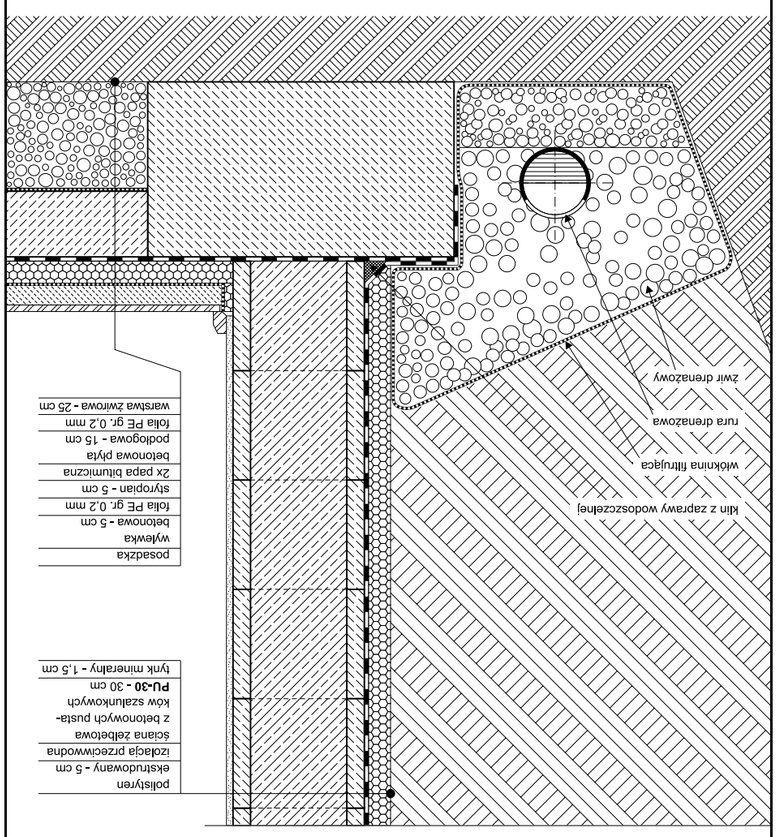

skala 1:10	PIONOWA KOORDYNACJA MODULARNA PROJEKTU BUDYNKU Z ELEMENTÓW ŚCIENNYCH TERMALICA®	BRUK-BET TERMALICA
nr rysunku 1-01		

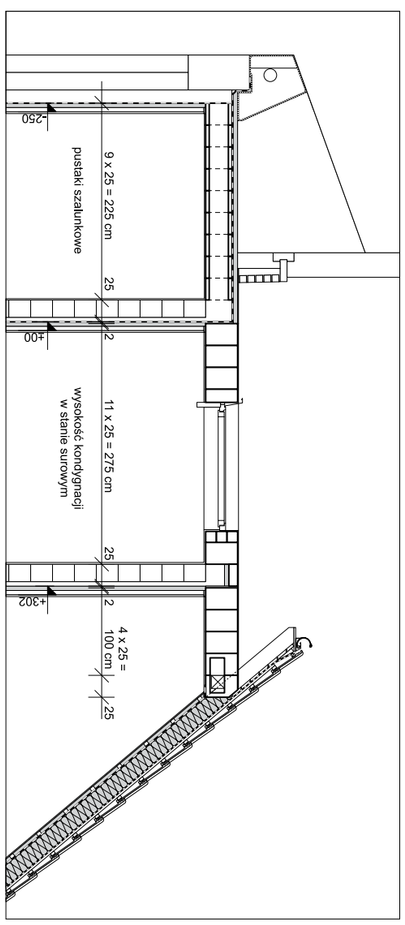

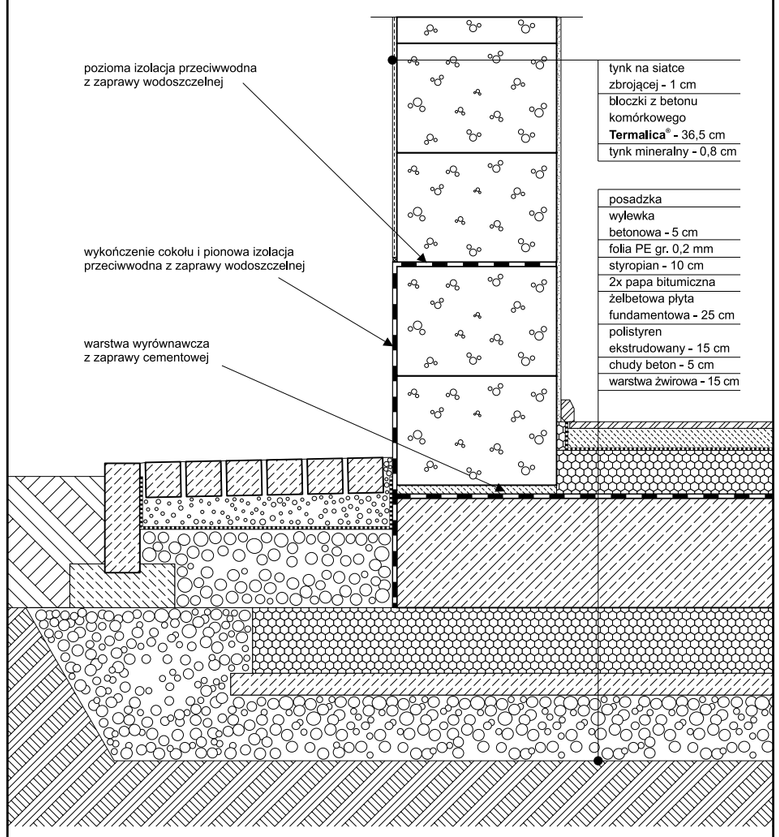

skala 1:10	PRZYZIEMIE BUDYNKU ŚCIANA JEDNOWARSTWOWA 36, 5 cm; POSADOWIENIE NA ŻELBETOWEJ PŁYCIE FUNDAMENTOWEJ	BRUK-BET TERMALICA
nr rysunku 1-05		

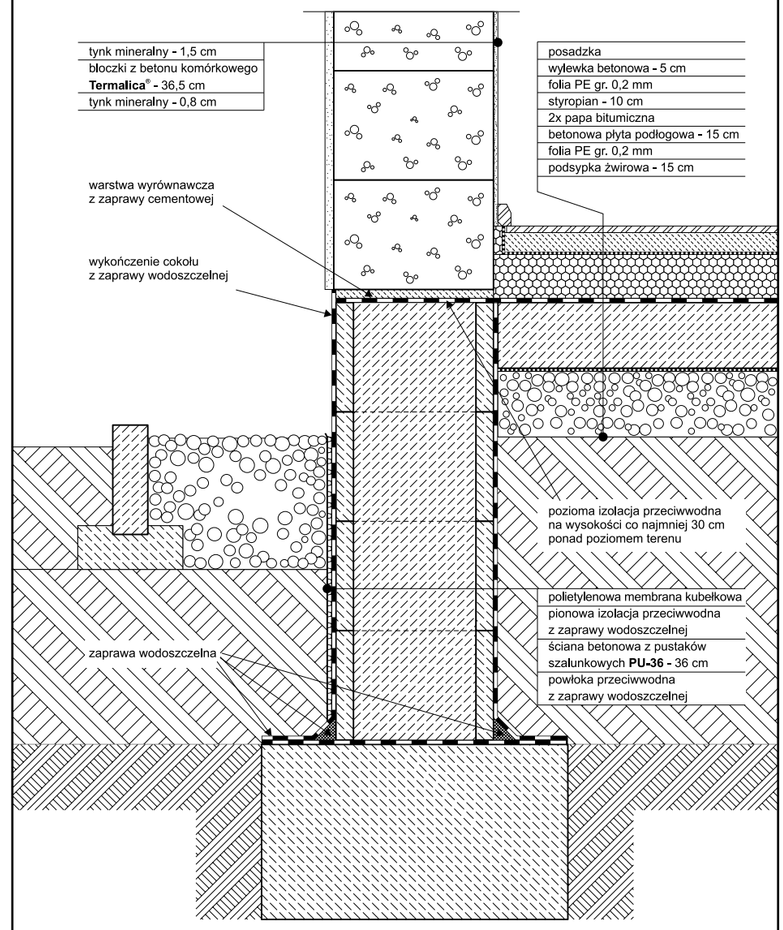

skala 1:10	PRZYZIEMIE BUDYNKU ŚCIANA JEDNOWARSTWOWA 36, 5 cm PODŁOGA NA GRUNCIE I TYNKOWANY COKÓŁ	BRUK-BET TERMALICA
nr rysunku 1-06		

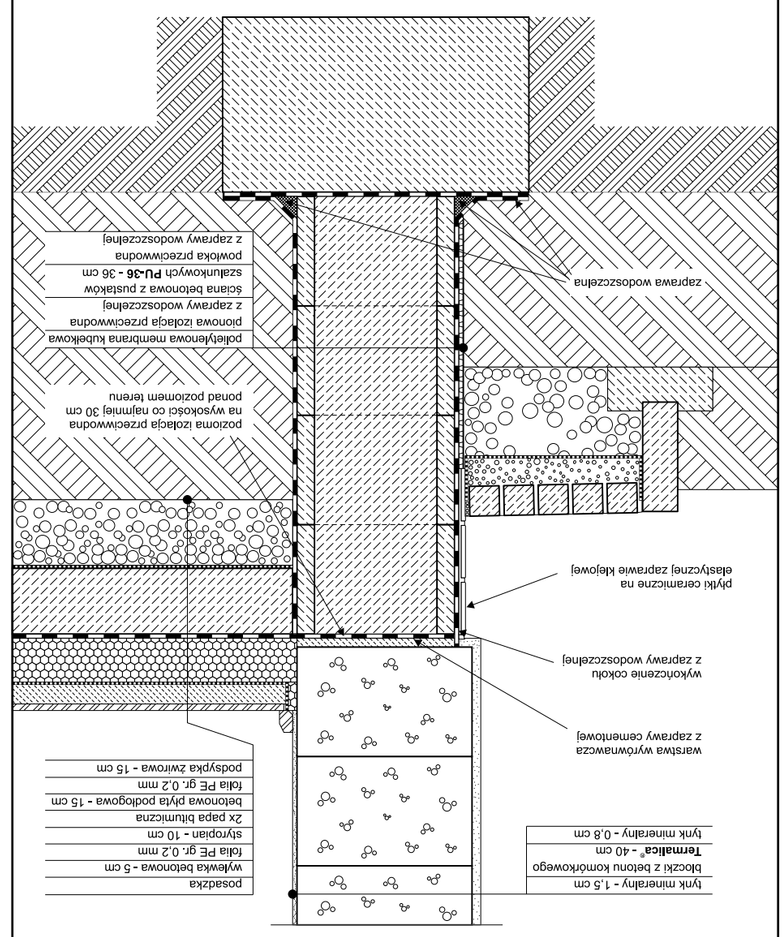

skala 1:10	PRZYZIEMIE BUDYNKU ŚCIANA JEDNOWARSTWOWA 40 cm PODŁOGA NA GRUNCIE I TYNKOWANY COKÓŁ	BRUK-BET TERMALICA
nr rysunku 1-07		

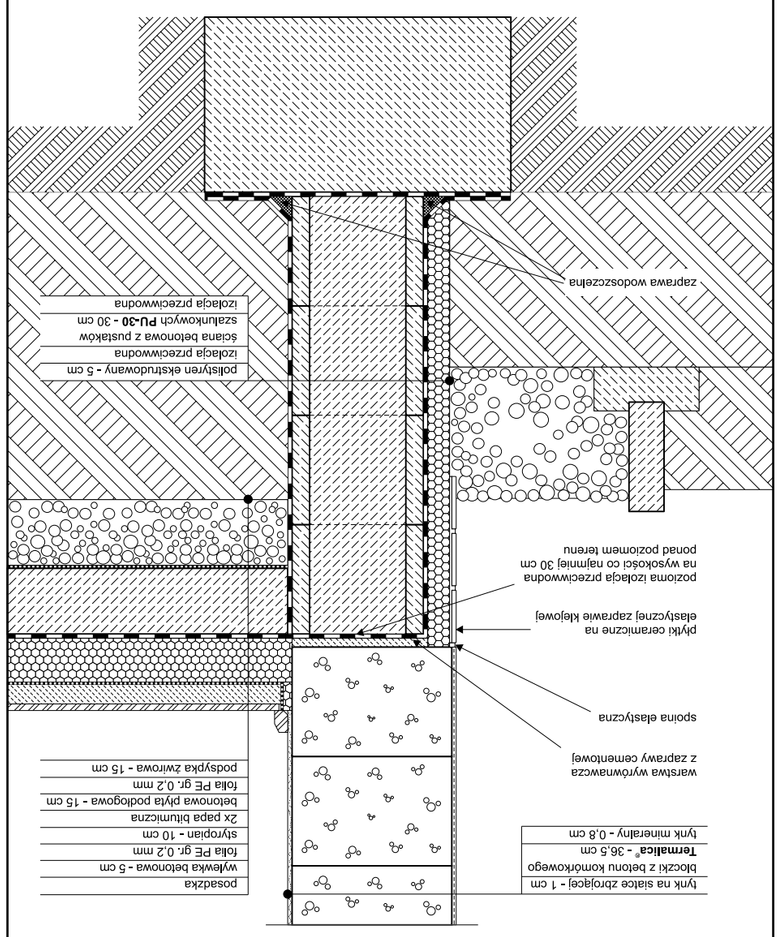

skala 1:10	PRZYZIEMIE BUDYNKU ŚCIANA JEDNOWARSTWOWA 36, 5 cm PODŁOGA NA GRUNCIE I OCIEPLONY COKÓŁ	BRUK-BET TERMALICA
nr rysunku 1-08		

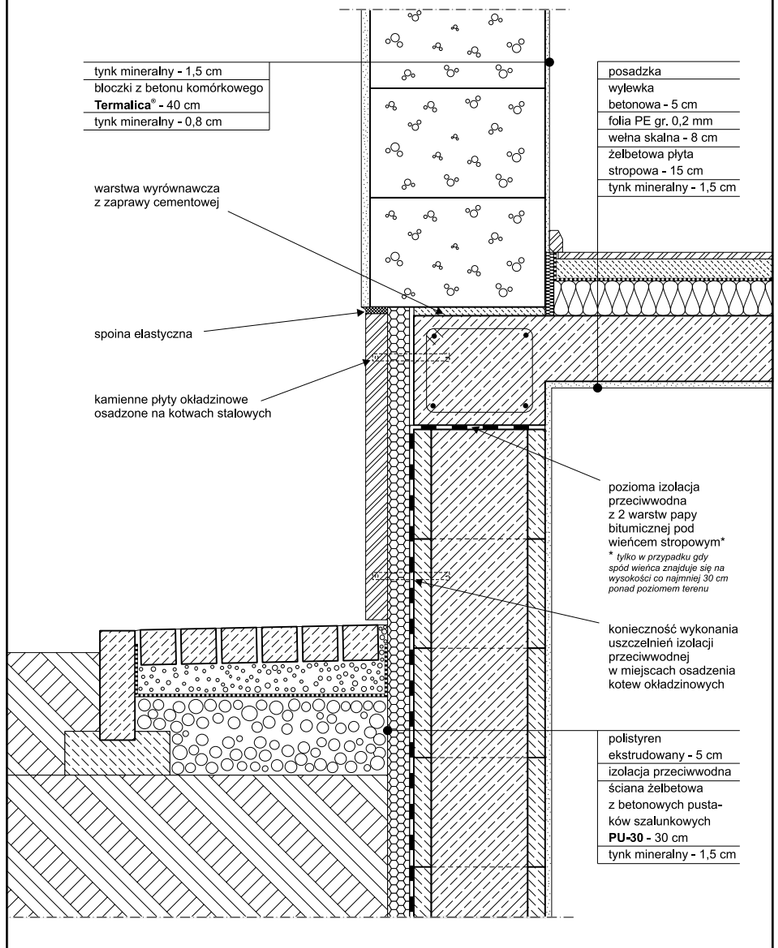

skala 1:10	PRZYZIEMIE BUDYNKU. ŚCIANA JEDNOWARSTWOWA 40 cm; ŚCIANA PIWNICZNA Z PUSTAKÓW SZALUNKOWYCH Z COKOŁEM Z PŁYT KAMIENNYCH	BRUK-BET TERMALICA
nr rysunku 1-11		

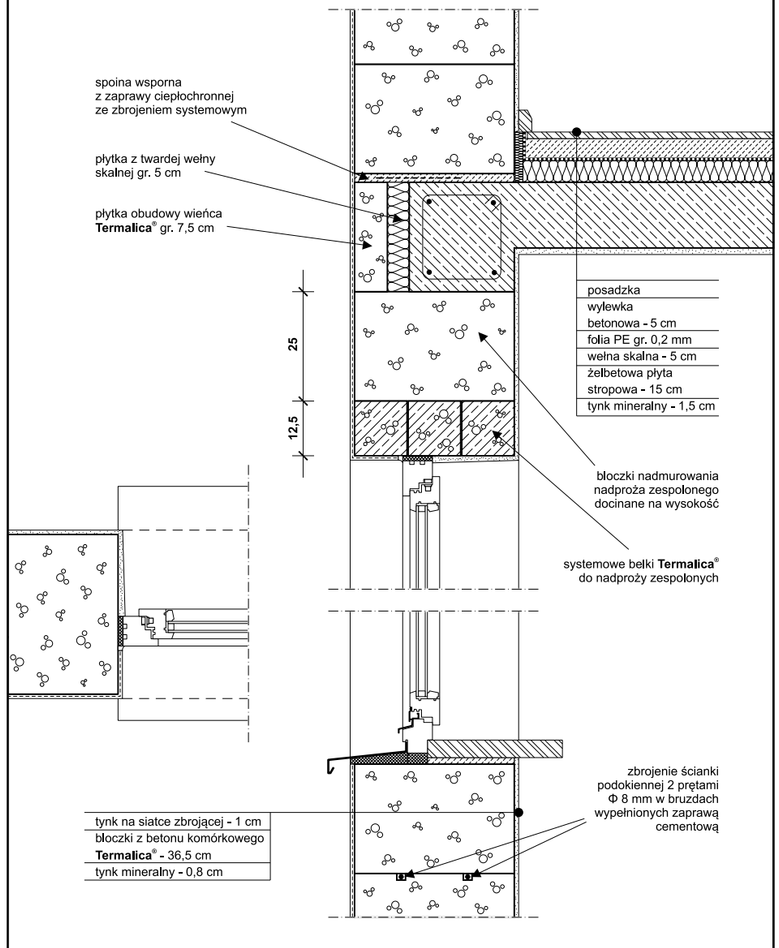

skala 1:10	OKNO Z NADPROŻEM ZESPOLONYM ŚCIANA JEDNOWARSTWOWA 36,5 cm	BRUK-BET TERMALICA
nr rysunku 1-12		

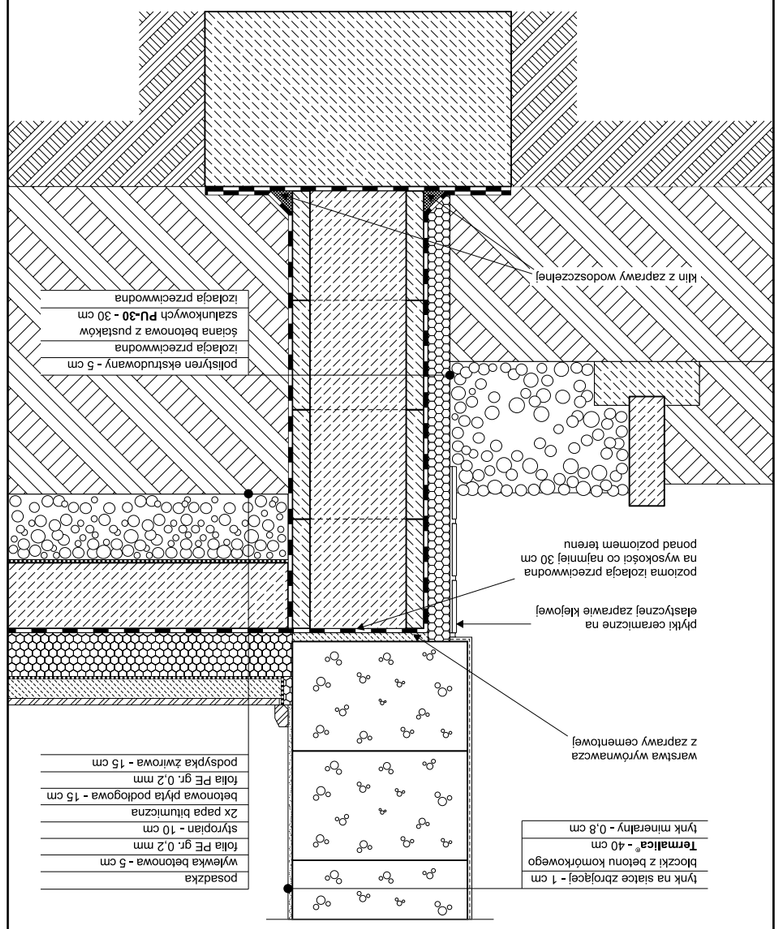

skala 1:10	PRZYZIEMIE BUDYNKU ŚCIANA JEDNOWARSTWOWA 40 cm PODŁOGA NA GRUNCIE I OCIEPLONY COKÓŁ	BRUK-BET TERMALICA
nr rysunku 1-09		

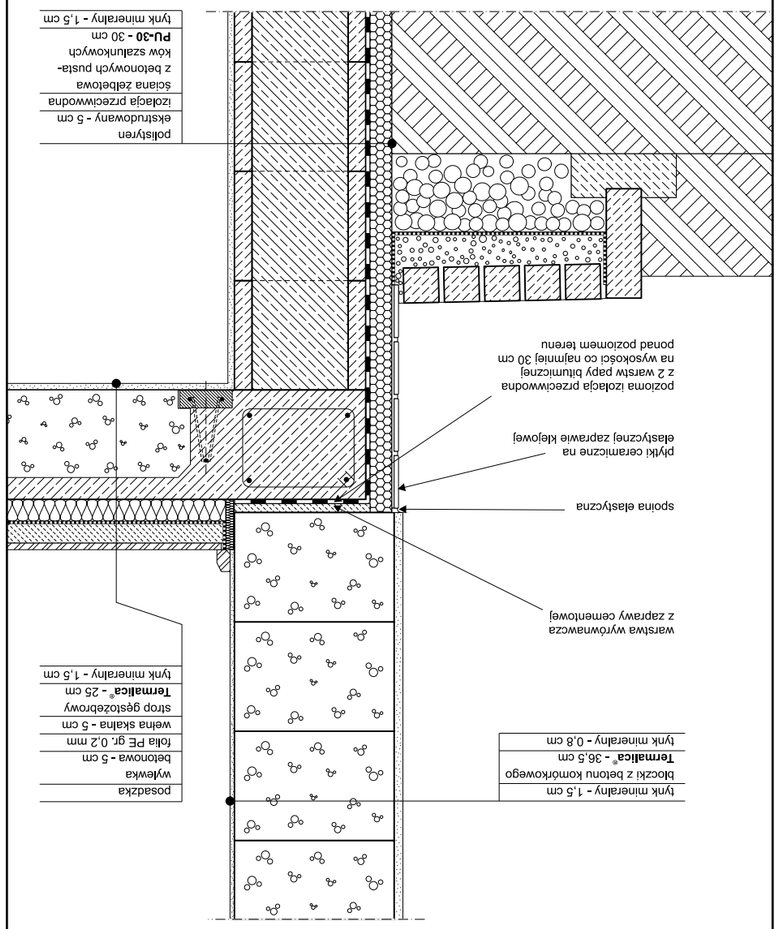

skala 1:10	PRZYZIEMIE BUDYNKU ŚCIANA JEDNOWARSTWOWA 36, 5 cm ŚCIANA PIWNICZNA Z PUSTAKÓW SZALUNKOWYCH	BRUK-BET TERMALICA
nr rysunku 1-10		

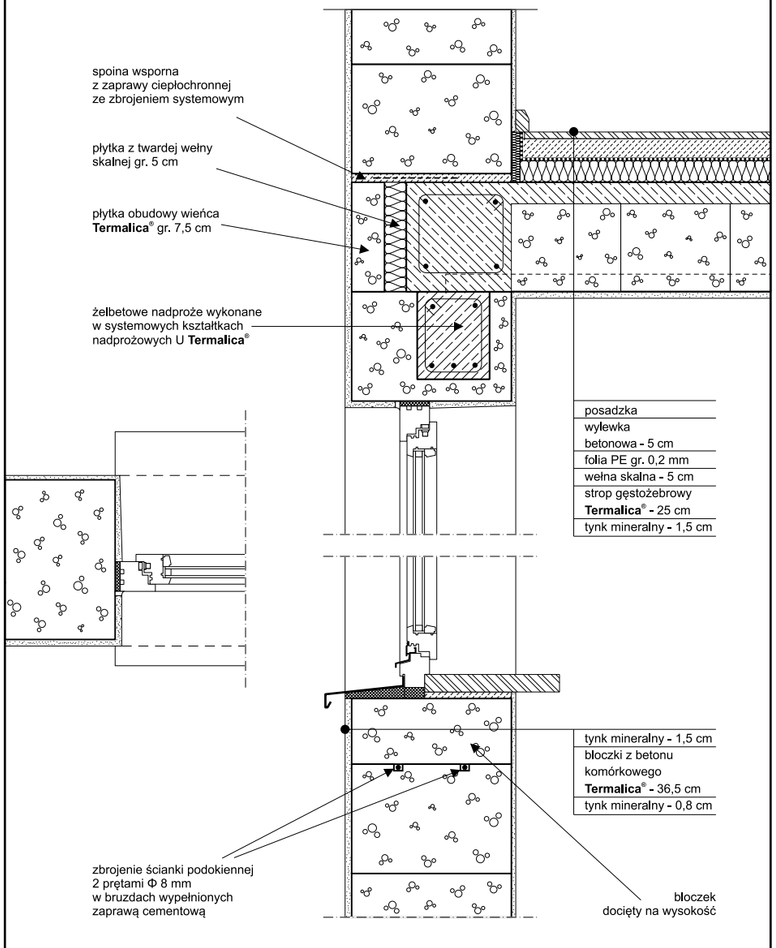

skala 1:10	OKNO Z NADPROŻEM W KSZTAŁTCE "U" ŚCIANA JEDNOWARSTWOWA 36,5 cm	BRUK-BET TERMALICA
nr rysunku 1-15		

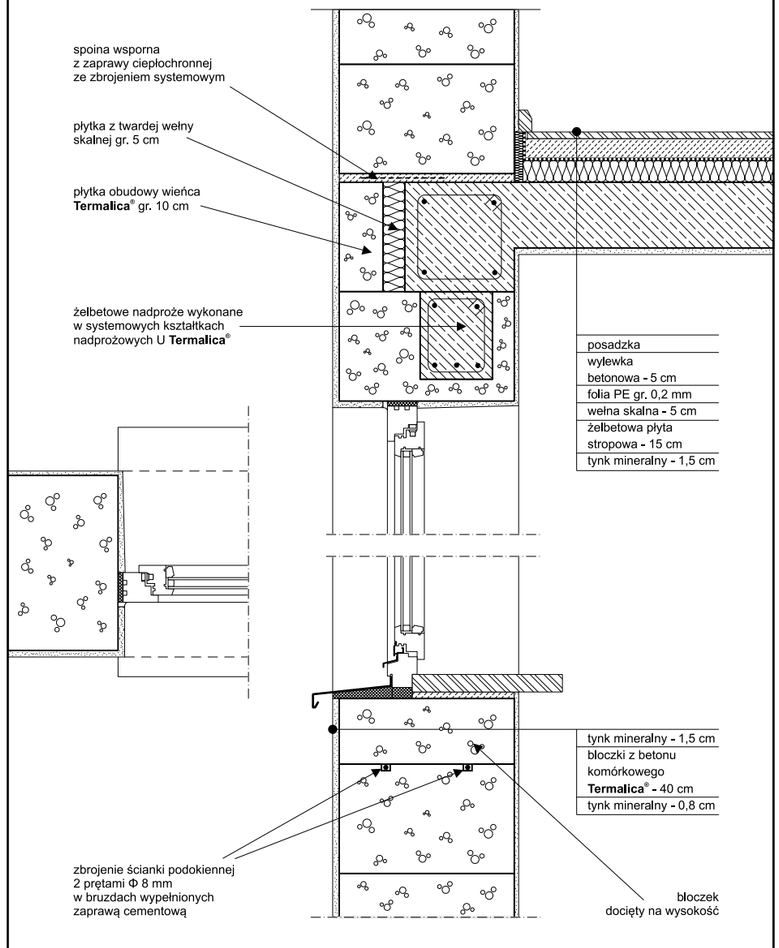

skala 1:10	OKNO Z NADPROŻEM W KSZTAŁTCE "U" ŚCIANA JEDNOWARSTWOWA 40 cm	BRUK-BET TERMALICA
nr rysunku 1-16		

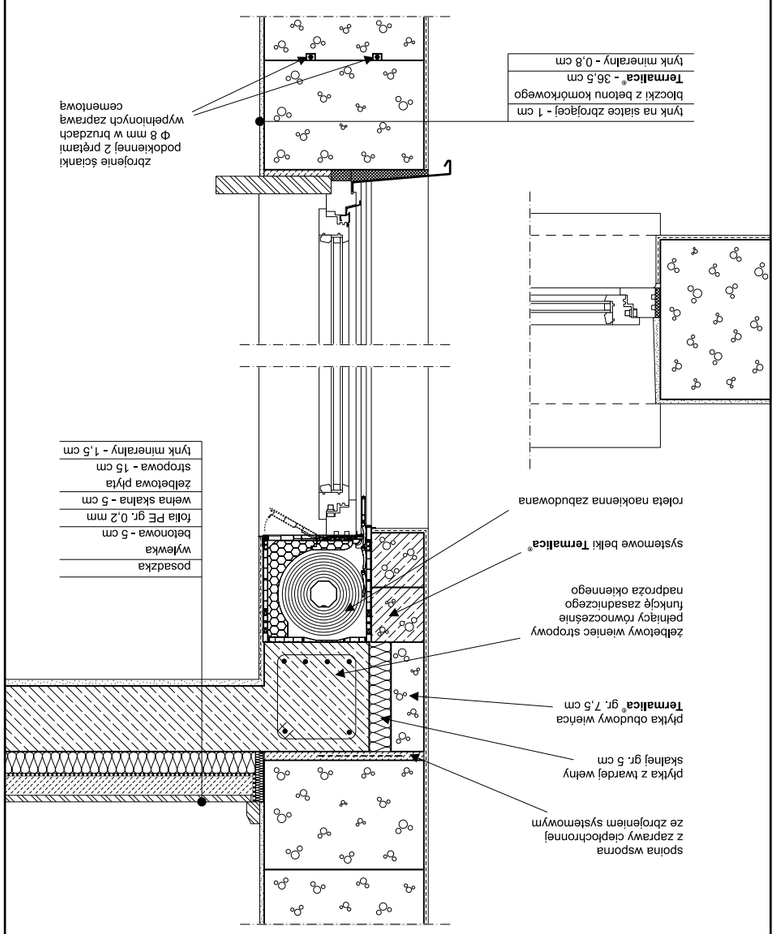

skala 1:10	OKNO Z ROLETĄ NAOKIENNĄ ŚCIANA JEDNOWARSTWOWA 36,5 cm	BRUK-BET TERMALICA
nr rysunku 1-14		

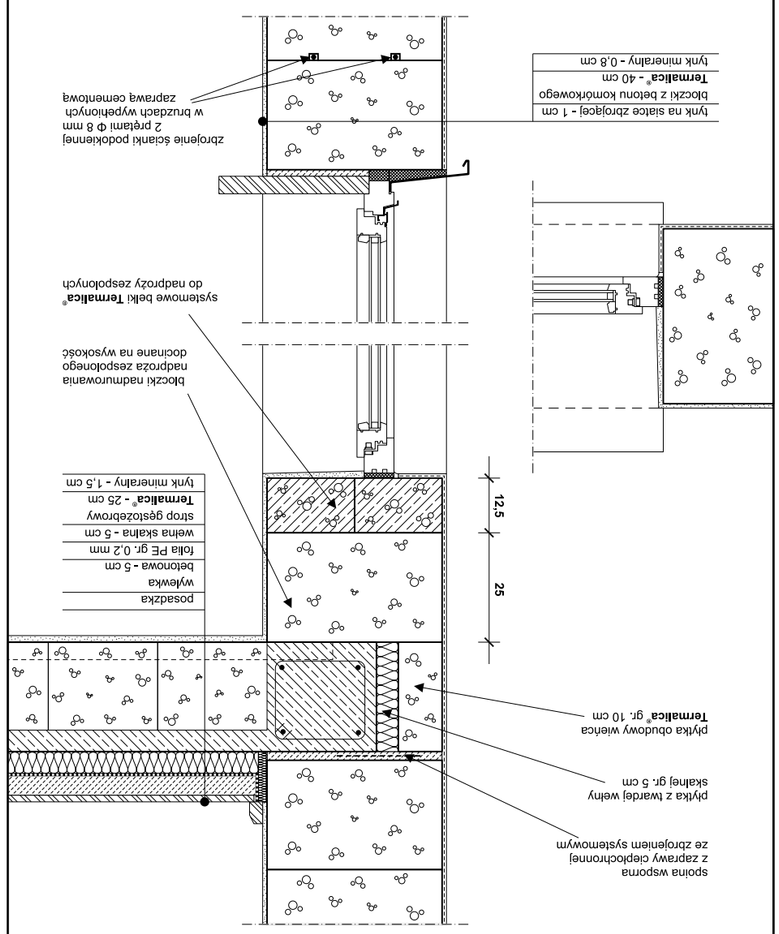

skala 1:10	OKNO Z NADPROŻEM ZESPOLONYM ŚCIANA JEDNOWARSTWOWA 40 cm	BRUK-BET TERMALICA
nr rysunku 1-13		

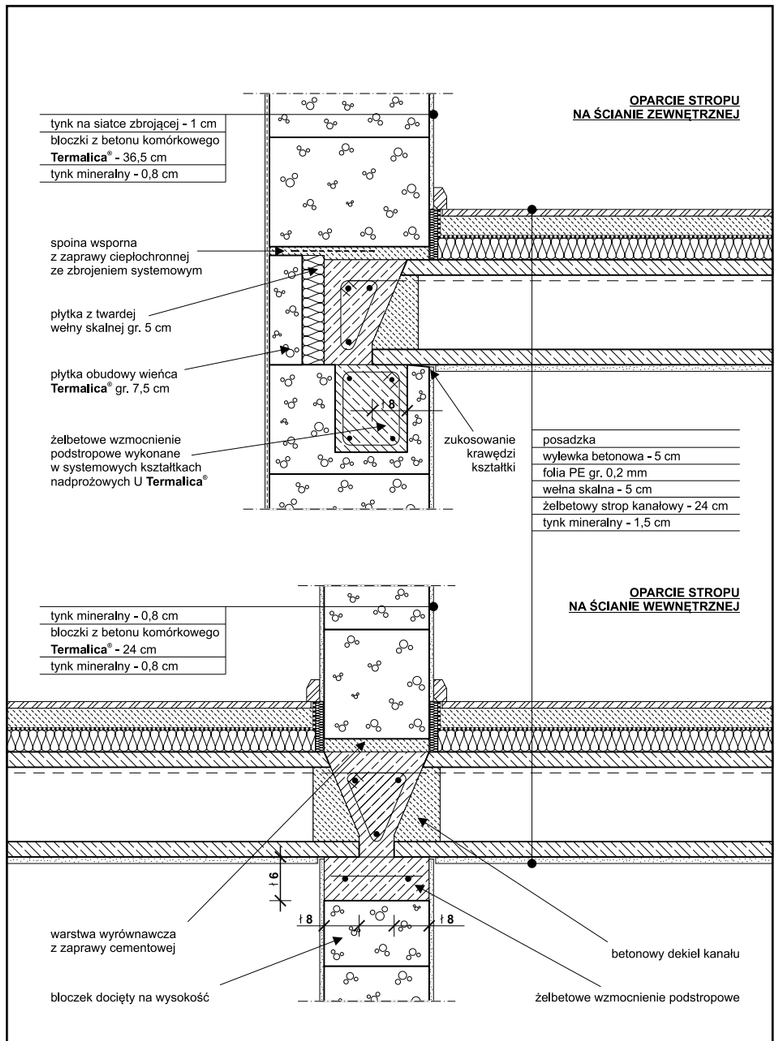

skala 1:10	STROP Z ŻELBETOWYCH PŁYT KANAŁOWYCH - POŁĄCZENIE ZE ŚCIANĄ ZEWNĘTRZNĄ JEDNOWARSTWOWĄ 36,5 cm I WEWNĘTRZNĄ 24 cm	BRUK-BET TERMALICA
nr rysunku 1-19		

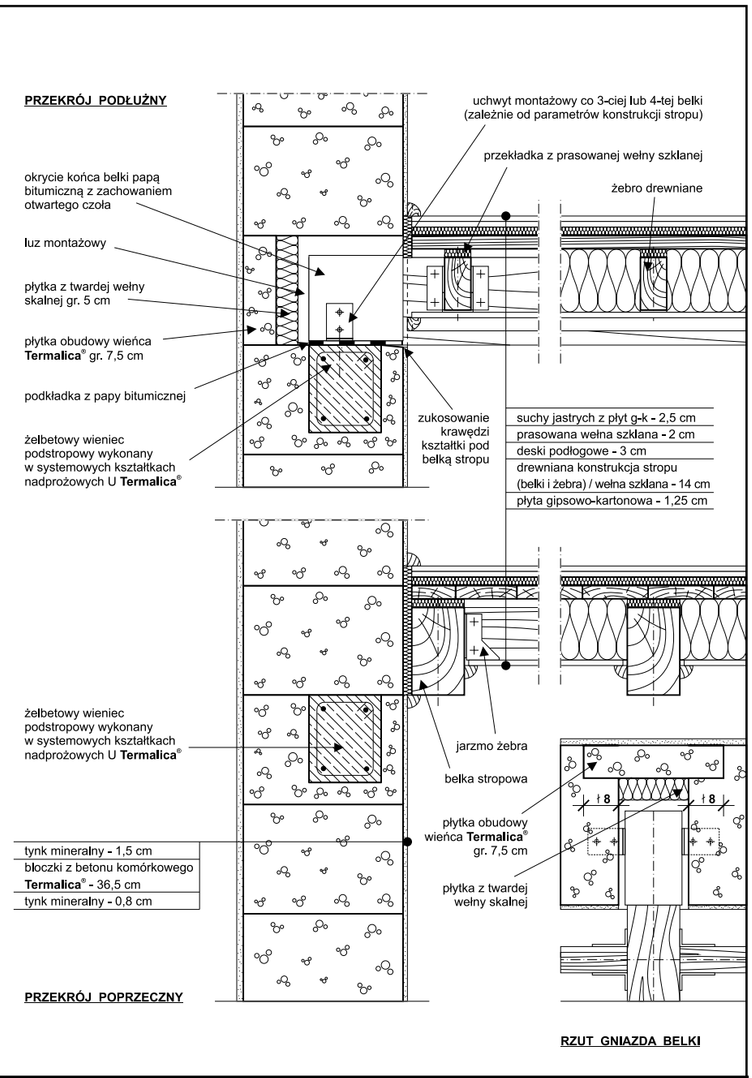

skala 1:10	STROP DREWNIANY ŻEBROWY - POŁĄCZENIE ZE ŚCIANĄ JEDNOWARSTWOWĄ 36,5 cm	BRUK-BET TERMALICA
nr rysunku 1-20		

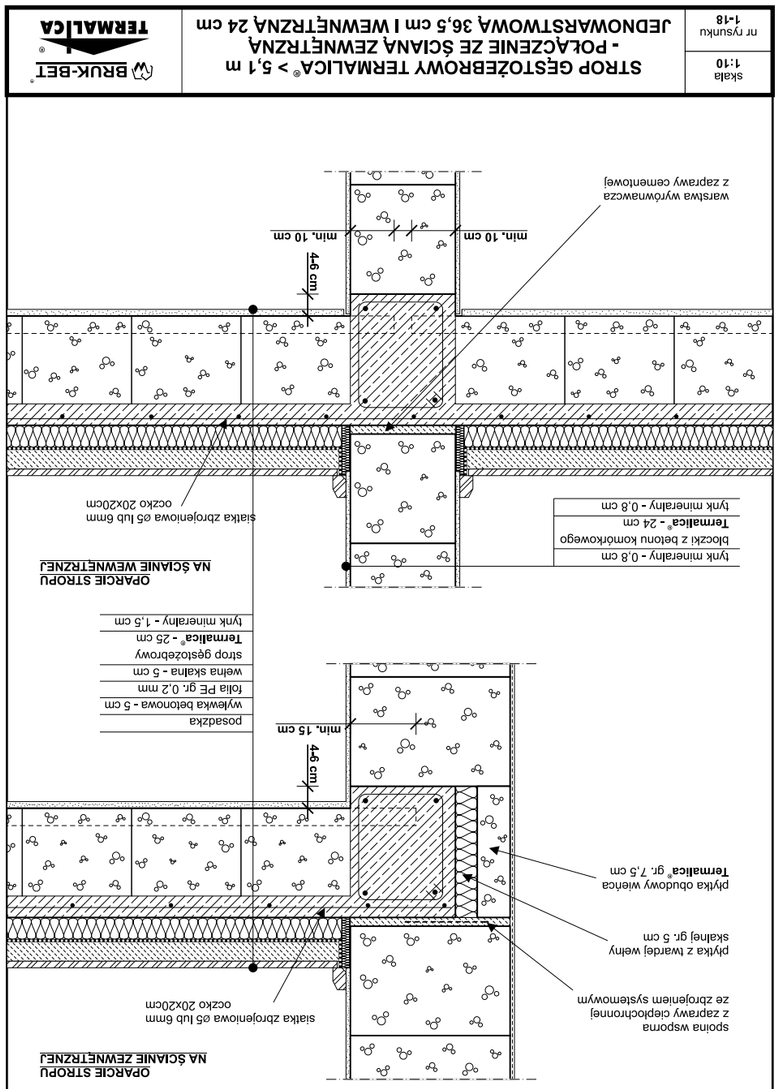

skala 1:10	STROP GĘSTOŻEBROWY TERMALICA® > 5,1 m - POŁĄCZENIE ZE ŚCIANĄ ZEWNĘTRZNĄ JEDNOWARSTWOWĄ 36,5 cm I WEWNĘTRZNĄ 24 cm	BRUK-BET TERMALICA
nr rysunku 1-18		

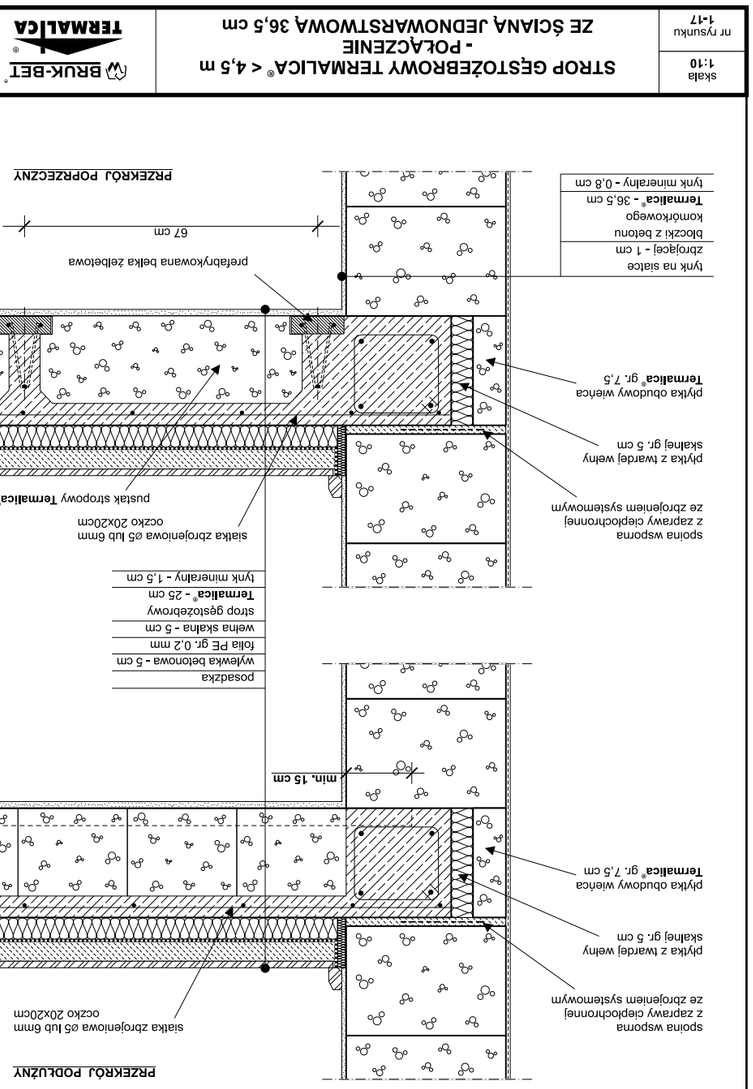

skala 1:10	STROP GĘSTOŻEBROWY TERMALICA® < 4,5 m - POŁĄCZENIE ZE ŚCIANĄ JEDNOWARSTWOWĄ 36,5 cm	BRUK-BET TERMALICA
nr rysunku 1-17		

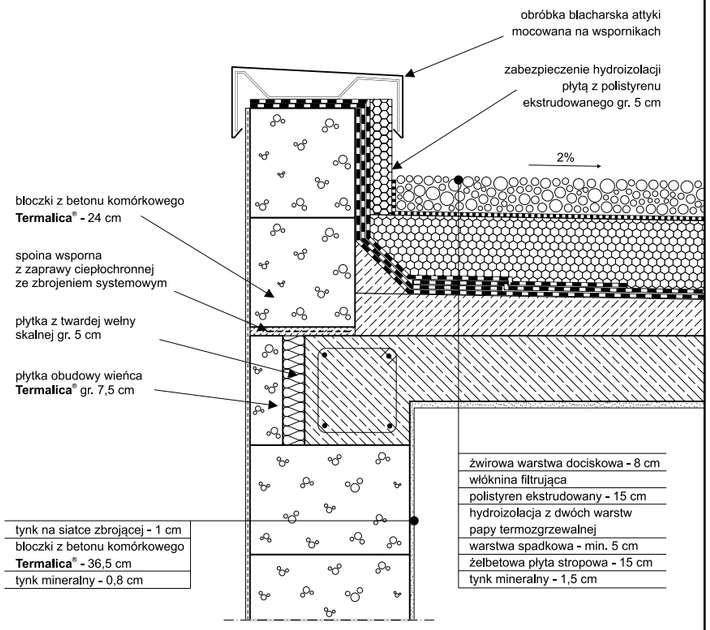

skala 1:10	ŚCIANKA ATTYKOWA STROPODACHU PEŁNEGO O ODWRÓCONYCH WARSTWACH ŚCIANA JEDNOWARSTWOWA 36,5 cm	BRUK-BET TERMALICA
nr rysunku 1-23		

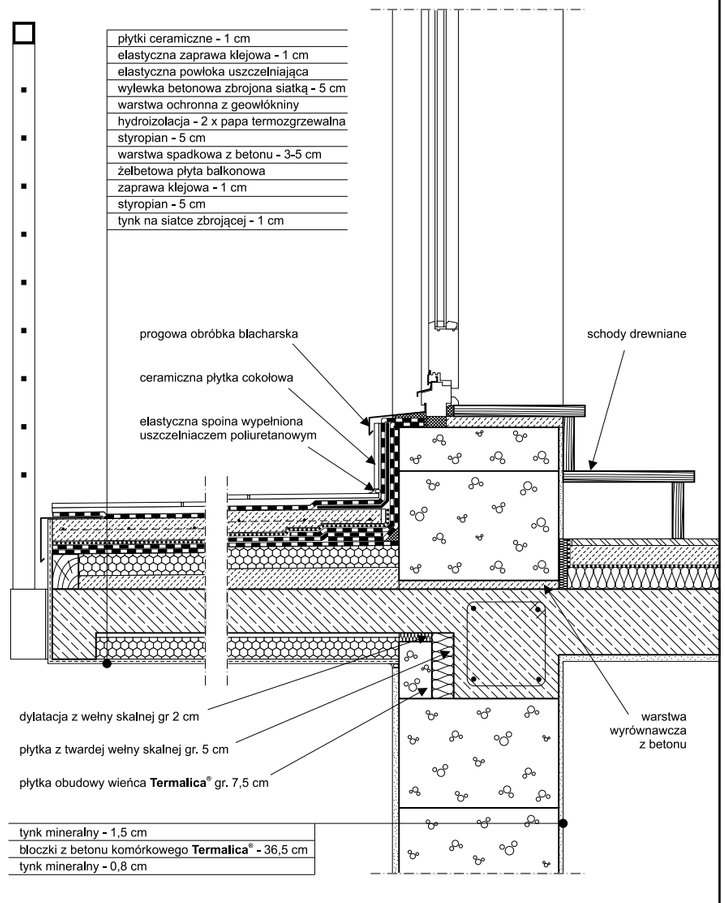

skala 1:10	OCIEPLONA PŁYTA WSPORNIKOWA BALKONU ŚCIANA JEDNOWARSTWOWA 36,5 cm	BRUK-BET TERMALICA
nr rysunku 1-24		

skala 1:10	ŚCIANKA KOLANKOWA Z WIEŃCEM POD MURŁATĄ I SŁUPKAMI ŻELBETOWYMI ŚCIANA JEDNOWARSTWOWA 36,5 cm	BRUK-BET TERMALICA
nr rysunku 1-21		

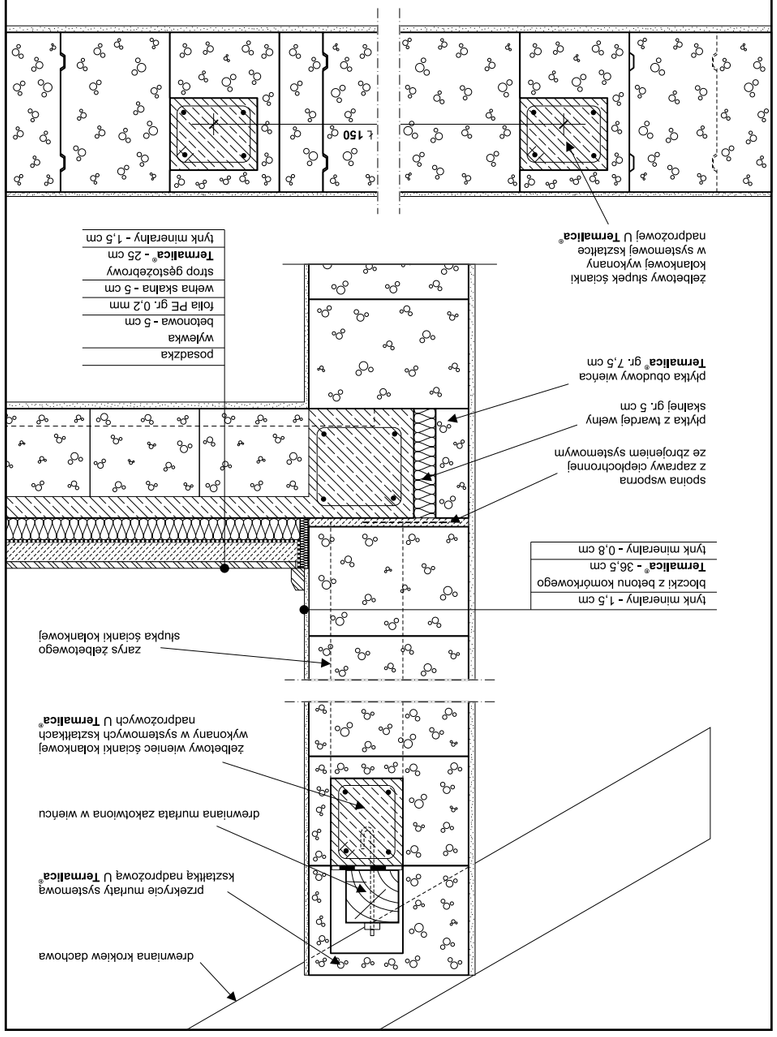

skala 1:10	OKAP DACHU W BUDYNKU Z PODDASZEM NIEOGRZEWANYM ŚCIANA JEDNOWARSTWOWA 36,5 cm	BRUK-BET TERMALICA
nr rysunku 1-22		

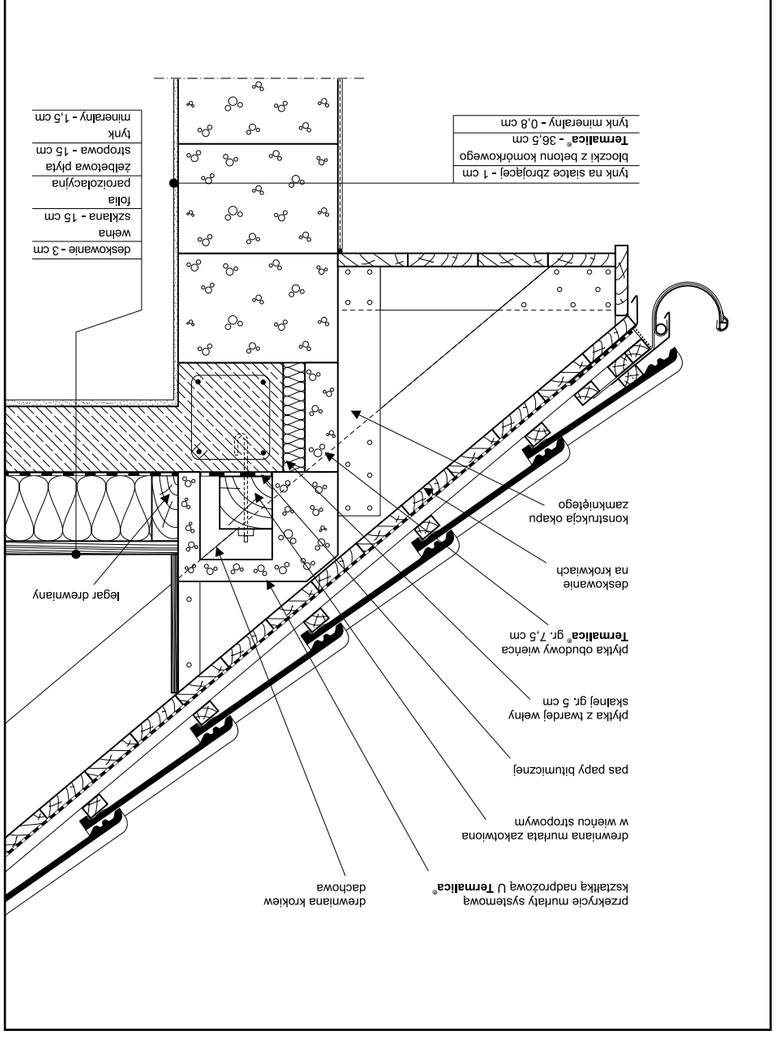

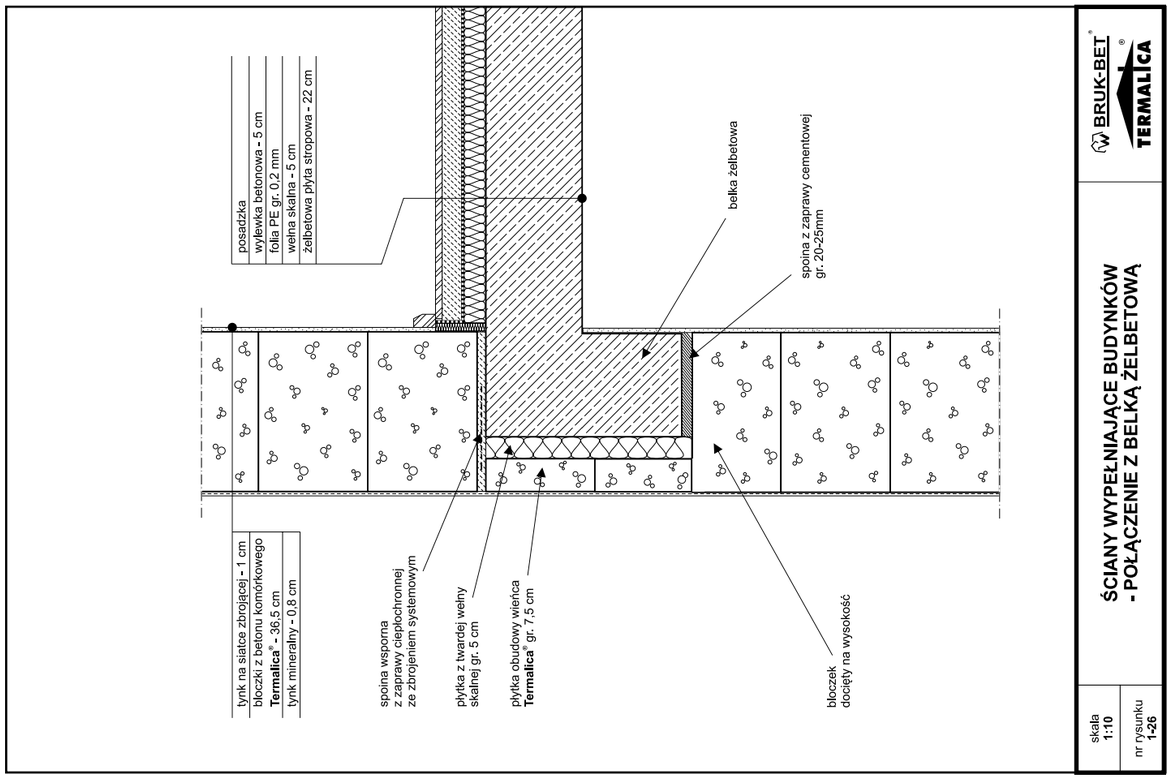
posadzka
wylewka betonowa - 5 cm
folia PE gr. 0,2 mm
wełna skalna - 5 cm
żelbetowa płyta stropowa - 22 cm
belka żelbetowa
spoina z zaprawy cementowej gr. 20-25mm
tynk na siatce zbrojącej - 1 cm
bloczki z betonu komórkowego Termalica® - 36,5 cm
tynk mineralny - 0,8 cm
spoina wsporna z zaprawy cieplochronnej ze zbrojeniem systemowym
płytka z twardej wełny skalnej gr. 5 cm
płytka obudowy wieńca Termalica® gr. 7,5 cm
bloczek dociętyy na wysokość
ŚCIANY WYPEŁNIAJĄCE BUDYNKÓW - POŁĄCZENIE Z BELKĄ ŻELBETOWĄ
skala 1:10
nr rysunku 1-26
BRUK-BET
TERMALICA

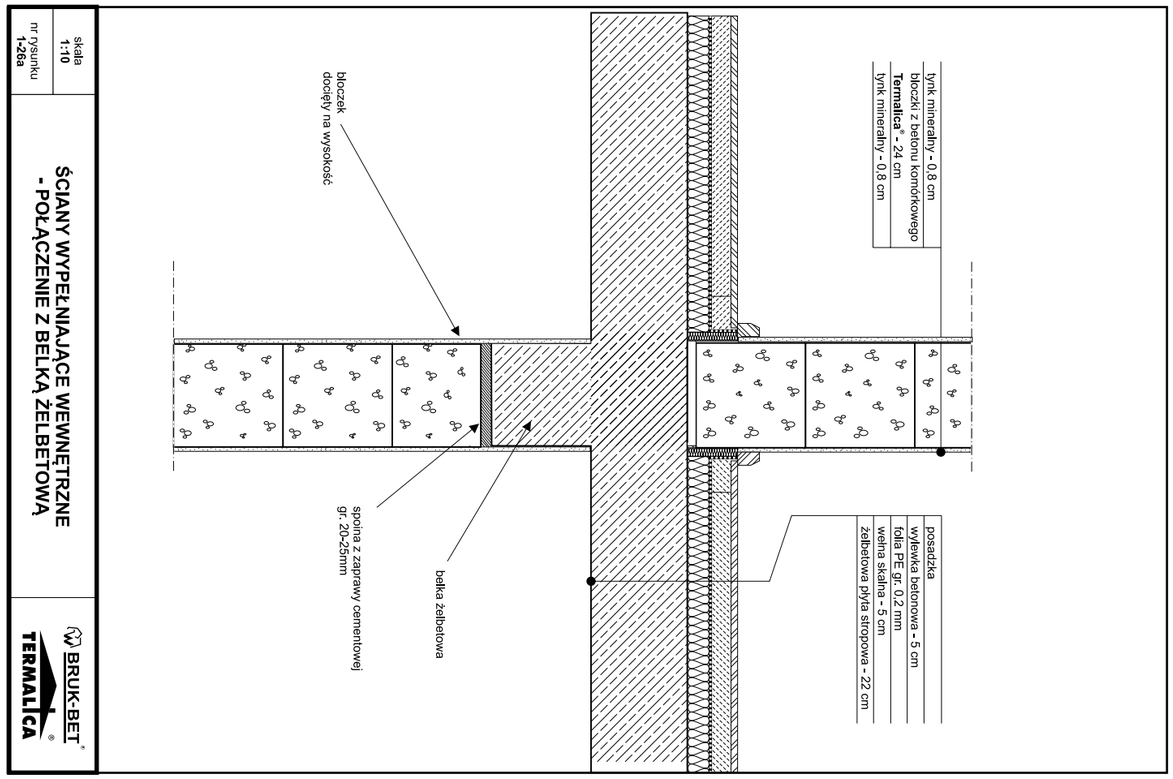
tynk mineralny - 0,8 cm
bloczki z betonu komórkowego Termalica® - 24 cm
tynk mineralny - 0,8 cm
bloczek dociętyy na wysokość
spoina z zaprawy cementowej gr. 20-25mm
belka żelbetowa
posadzka
wylewka betonowa - 5 cm
folia PE gr. 0,2 mm
wełna skalna - 5 cm
żelbetowa płyta stropowa - 22 cm
ŚCIANY WYPEŁNIAJĄCE WEWNĘTRZNE - POŁĄCZENIE Z BELKĄ ŻELBETOWĄ
skala 1:10
nr rysunku 1-26a
BRUK-BET
TERMALICA

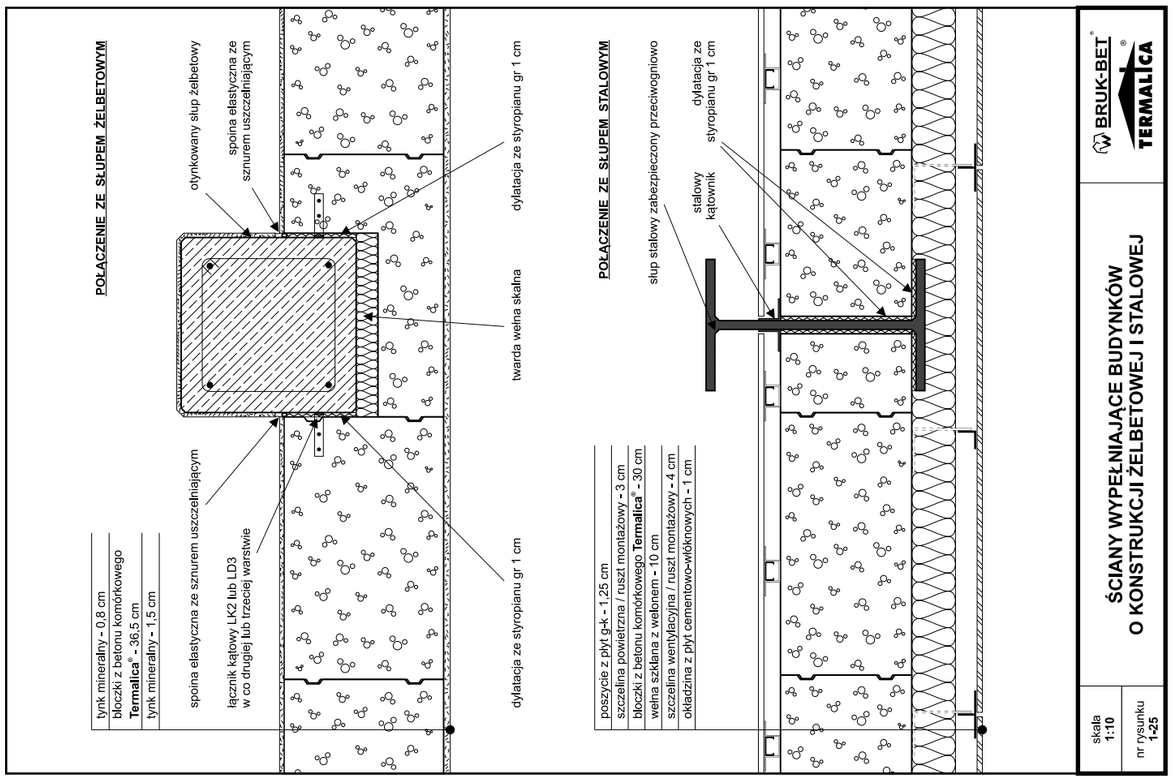
POŁĄCZENIE ZE SŁUPEM ŻELBETOWYM
tynk mineralny - 0,8 cm
bloczki z betonu komórkowego Termalica® - 36,5 cm
tynk mineralny - 1,5 cm
spoina elastyczna ze sznurem uszczelniającym
łącznik kątowy LK2 lub LD3 w co drugiej lub trzeciej warstwie
otynkowany słup żelbetowy
spoina elastyczna ze sznurem uszczelniającym
twarda wełna skalna
dylatacja ze styropianu gr 1 cm
dylatacja ze styropianu gr 1 cm
POŁĄCZENIE ZE SŁUPEM STALOWYM
słup stalowy zabezpieczony przeciwogniowo
stalowy kątownik
dylatacja ze styropianu gr 1 cm
poszycie z płyt g-k - 1,25 cm
szczelina powietrzna / rusz montażowy - 3 cm
bloczki z betonu komórkowego Termalica® - 30 cm
wełna szklana z wełnem - 10 cm
szczelina wentylacyjna / rusz montażowy - 4 cm
okładzina z płyt cementowo-włóknowych - 1 cm
ŚCIANY WYPEŁNIAJĄCE BUDYNKÓW O KONSTRUKCJI ŻELBETOWEJ I STALOWEJ
skala 1:10
nr rysunku 1-25
BRUK-BET
TERMALICA

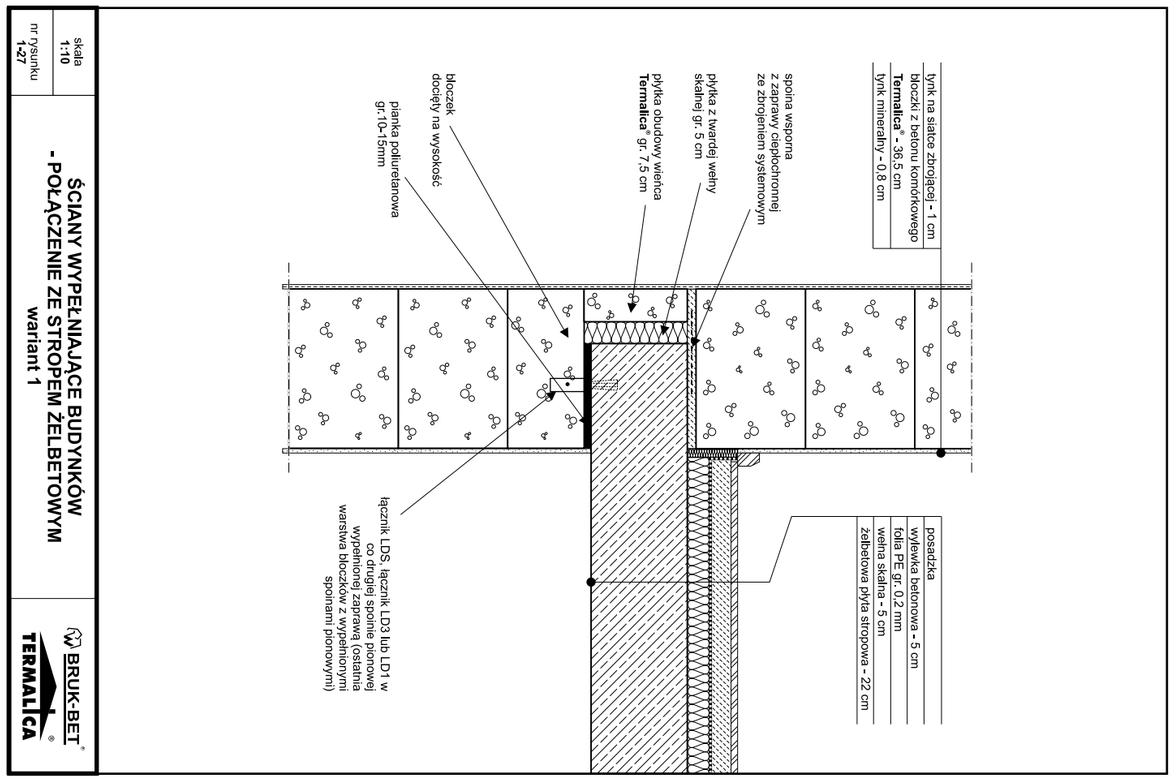
tynk na siatce zbrojącej - 1 cm
bloczki z betonu komórkowego Termalica® - 36,5 cm
tynk mineralny - 0,8 cm
spoina wsporna z zaprawy cieplochronnej ze zbrojeniem systemowym
płytka z twardej wełny skalnej gr. 5 cm
płytka obudowy wieńca Termalica® gr. 7,5 cm
bloczek dociętyy na wysokość
pianka poliuretanowa gr. 10-15mm
łącznik LDS, łącznik LD3 lub LD1 w co drugiej spoinie pionowej wypełnionej zaprawą (ostatnia warstwa bloczków z wypełnionymi spoinami pionowymi)
posadzka
wylewka betonowa - 5 cm
folia PE gr. 0,2 mm
wełna skalna - 5 cm
żelbetowa płyta stropowa - 22 cm
ŚCIANY WYPEŁNIAJĄCE BUDYNKÓW - POŁĄCZENIE ZE STROPEM ŻELBETOWYM wariant 1
skala 1:10
nr rysunku 1-27
BRUK-BET
TERMALICA

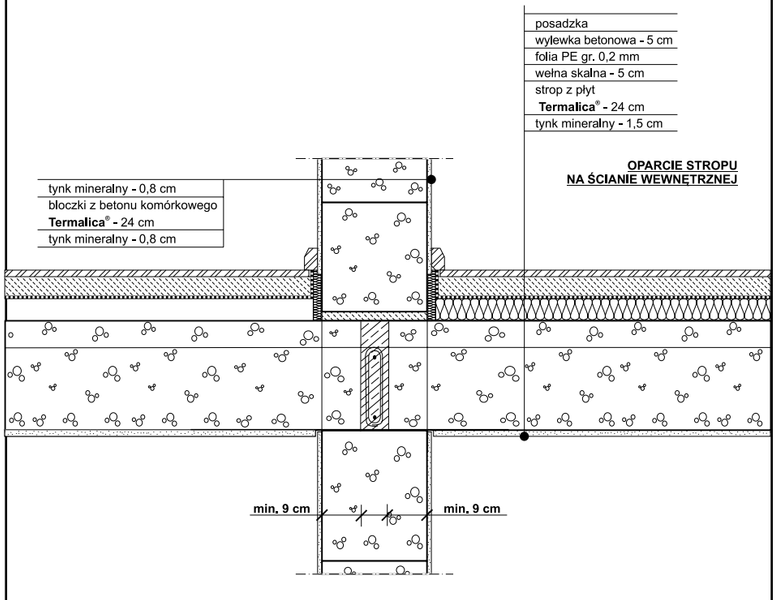

skala 1:10	STROP Z PŁYT TERMALICA® - POŁĄCZENIE ZE ŚCIANĄ WEWNĘTRZNĄ 24 cm	BRUK-BET TERMALICA
nr rysunku 1-30		

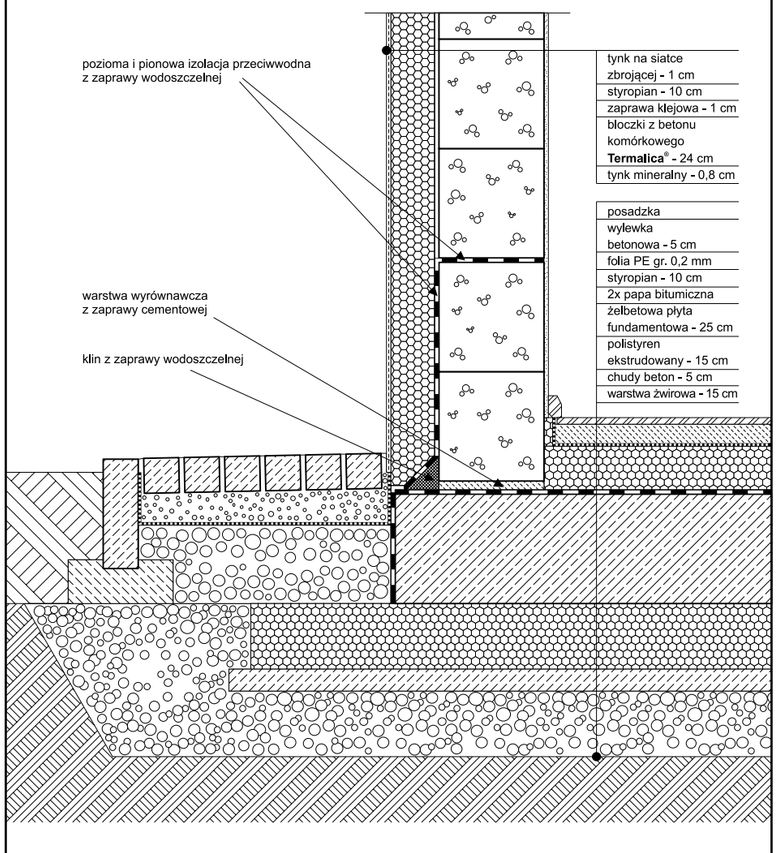

skala 1:10	PRZYZIEMIE BUDYNKU - ŚCIANA DWUWARSTWOWA POSADOWIENIE NA ŻELBETOWEJ PŁYCIE FUNDAMENTOWEJ	BRUK-BET TERMALICA
nr rysunku 2-01		

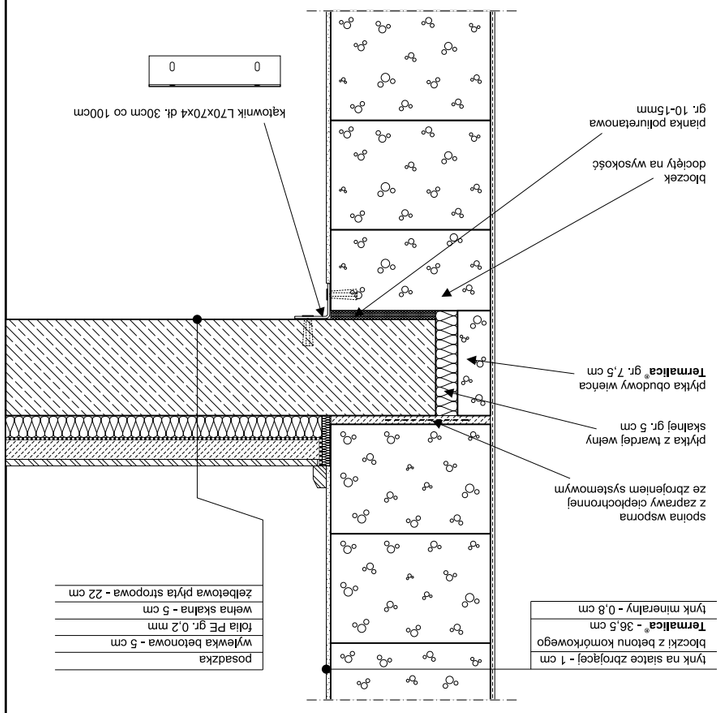

skala 1:10	ŚCIANY WYPEŁNIAJĄCE BUDYNKÓW - POŁĄCZENIE ZE STROPEM ŻELBETOWYM wariant 2	BRUK-BET TERMALICA
nr rysunku 1-28		

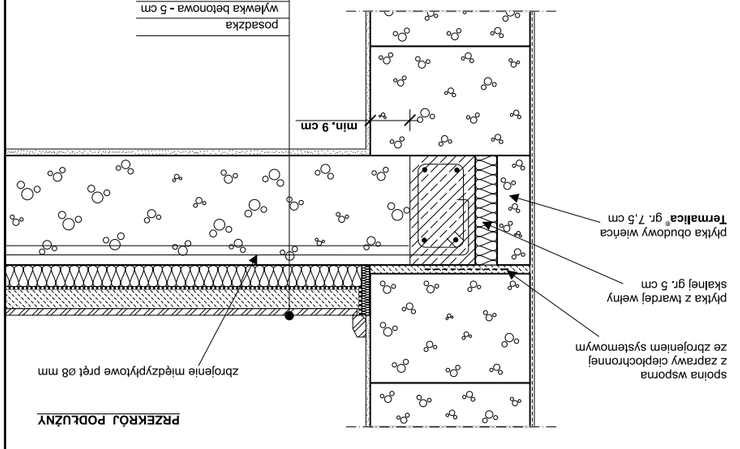

skala 1:10	STROP Z PŁYT TERMALICA® - POŁĄCZENIE ZE ŚCIANĄ JEDNOWARSTWOWĄ 36,5 cm	BRUK-BET TERMALICA
nr rysunku 1-29		

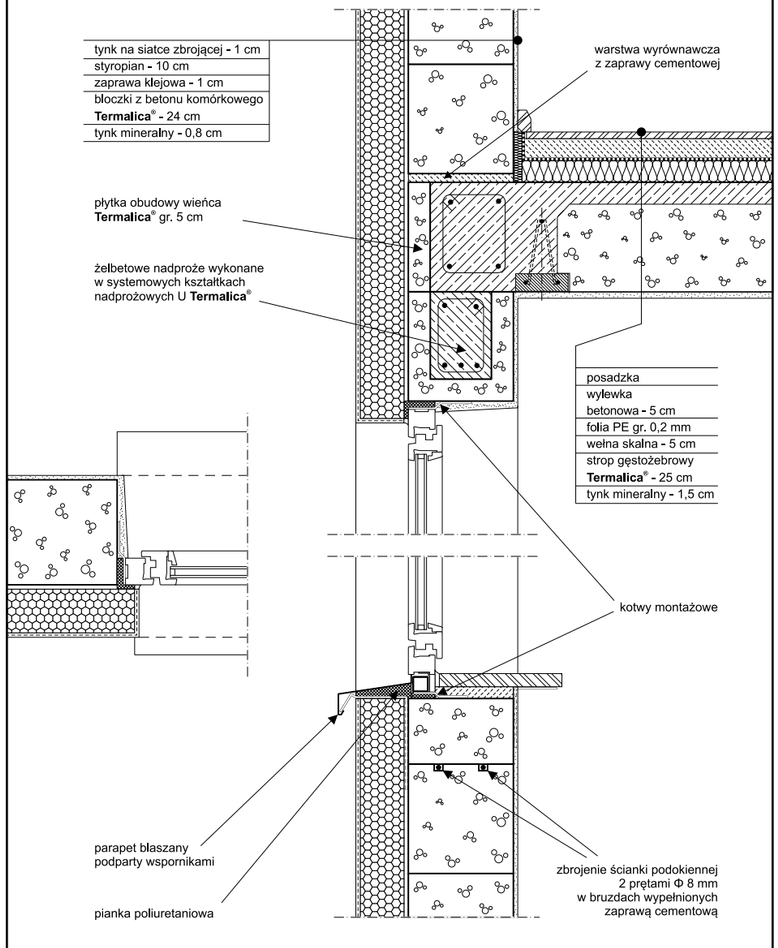

skala 1:10	OKNO Z NADPROŻEM W KSZTAŁTCE "U" ŚCIANA DWUWARSTWOWA	BRUK-BET TERMALICA
nr rysunku 2-04		

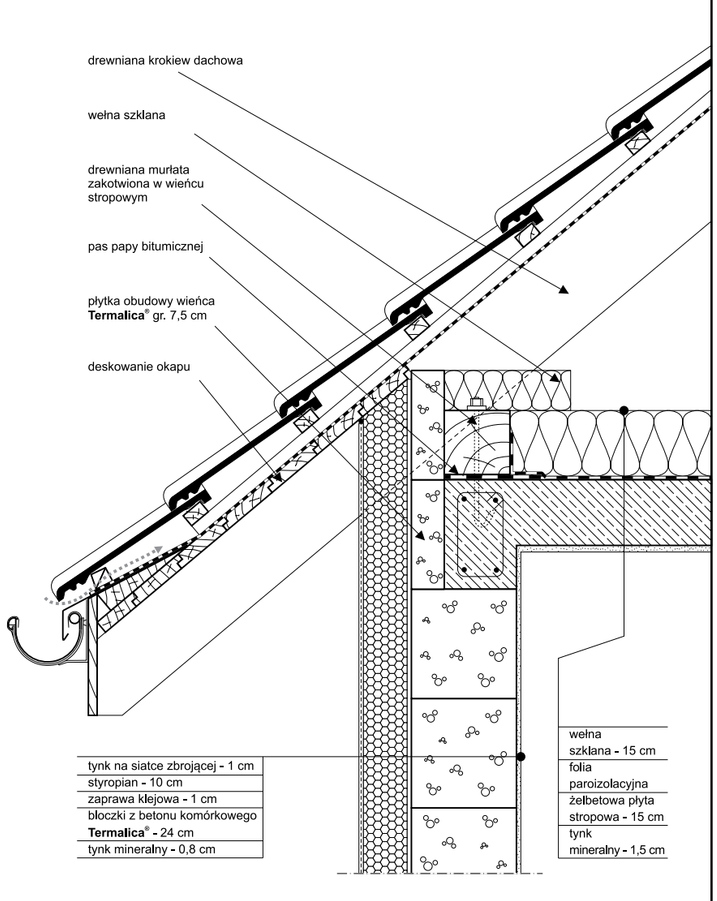

skala 1:10	OKAP DACHU W BUDYNKU Z PODDASZEM NIEOGRZEWANYM ŚCIANA DWUWARSTWOWA	BRUK-BET TERMALICA
nr rysunku 2-05		

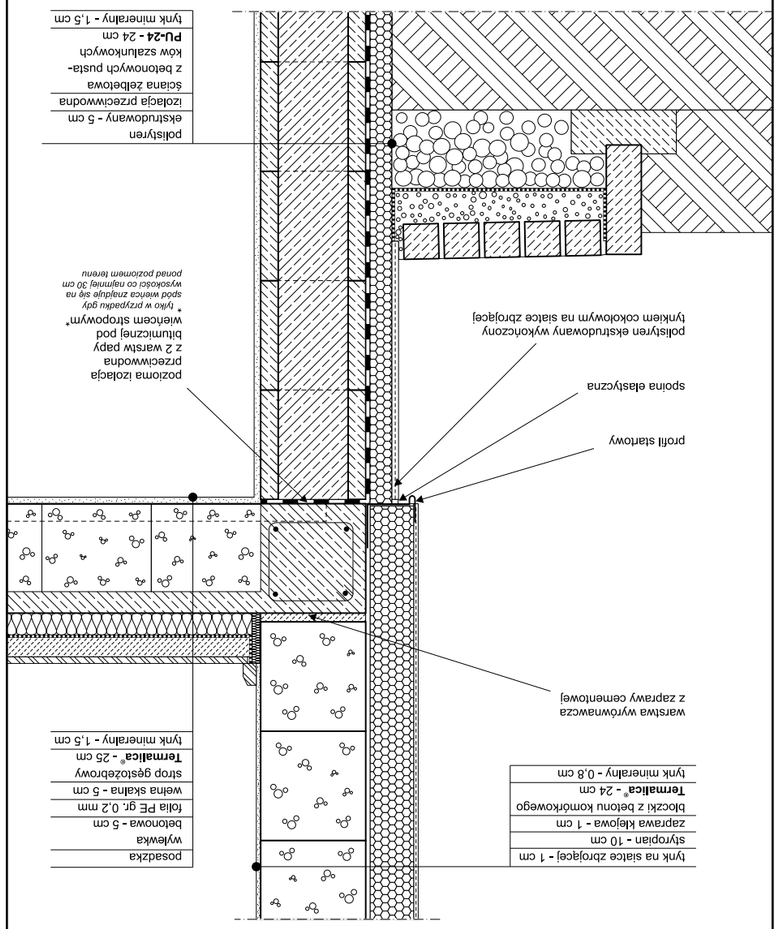

skala 1:10	PRZYZIEMIE BUDYNKU ŚCIANA DWUWARSTWOWA ŚCIANA PIWNICZNA Z PUSTAKÓW SZALUNKOWYCH	BRUK-BET TERMALICA
nr rysunku 2-03		

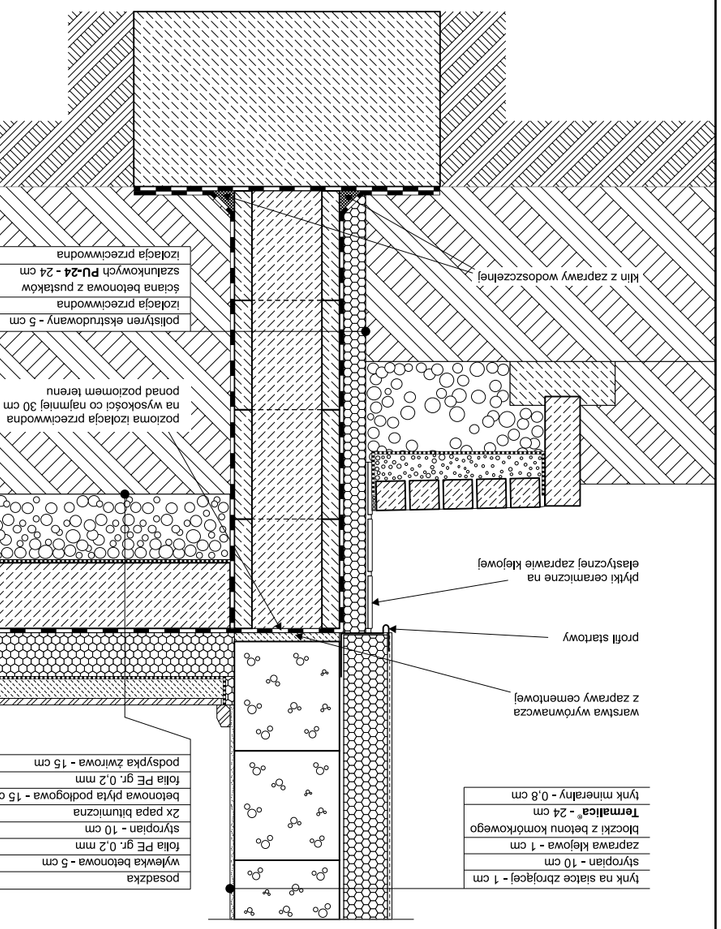

skala 1:10	PRZYZIEMIE BUDYNKU ŚCIANA DWUWARSTWOWA PODŁOGA NA GRUNCIE I OCIEPLONY COKÓŁ	BRUK-BET TERMALICA
nr rysunku 2-02		

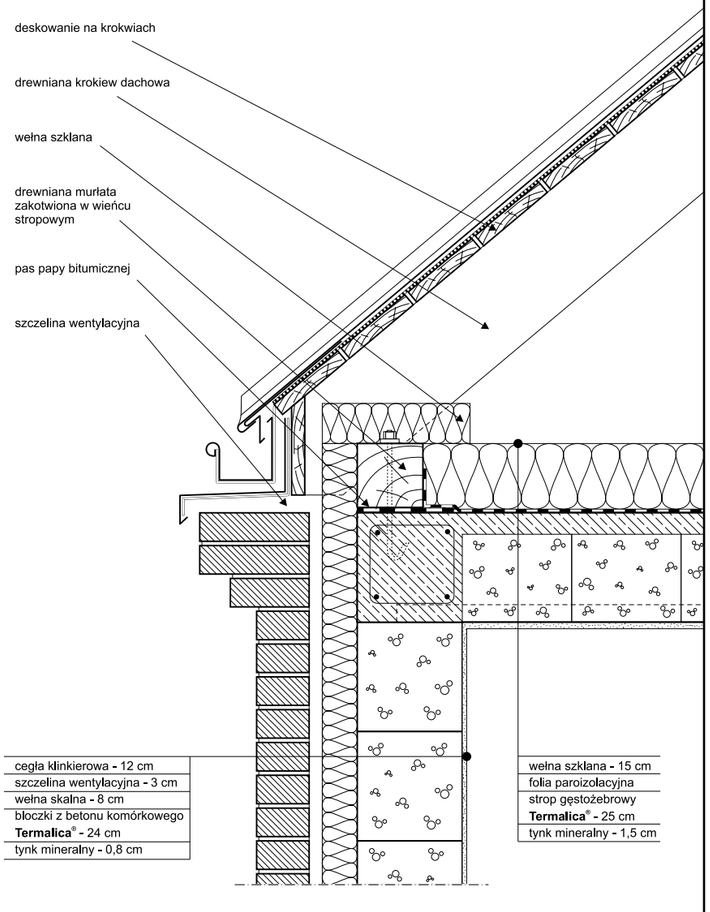

skala 1:10	OKAP DACHU W BUDYNKU Z PODDASZEM NIEOGRZEWANYM ŚCIANA TRÓJWARSTWOWA	BRUK-BET TERMALICA
nr rysunku 3-04		

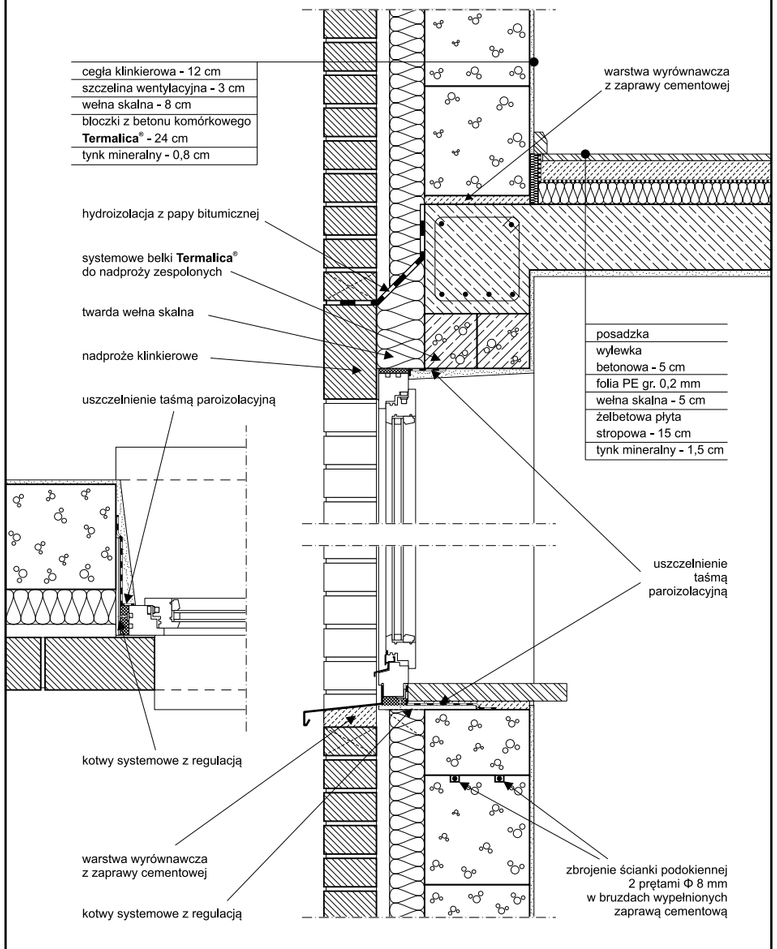

skala 1:10	OKNO Z NADPROŻEM ZESPOLONYM ŚCIANA TRÓJWARSTWOWA	BRUK-BET TERMALICA
nr rysunku 3-03		

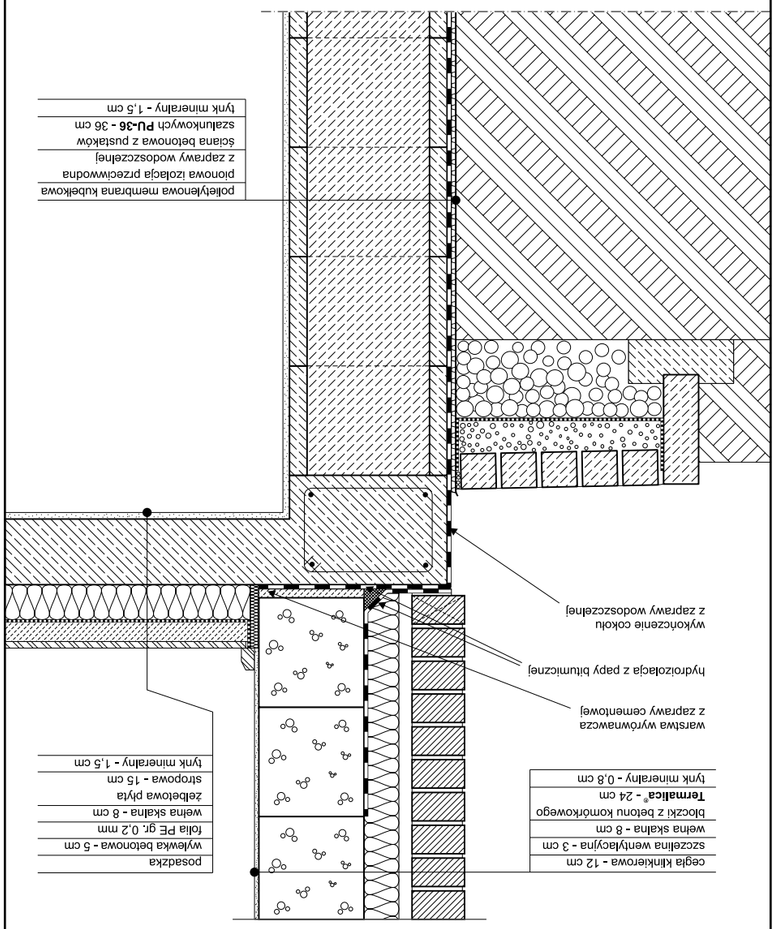

skala 1:10	PRZYZIEMIE BUDYNKU ŚCIANA TRÓJWARSTWOWA ŚCIANA PIWNICZNA Z PUSTAKÓW SZALUNKOWYCH	BRUK-BET TERMALICA
nr rysunku 3-02		

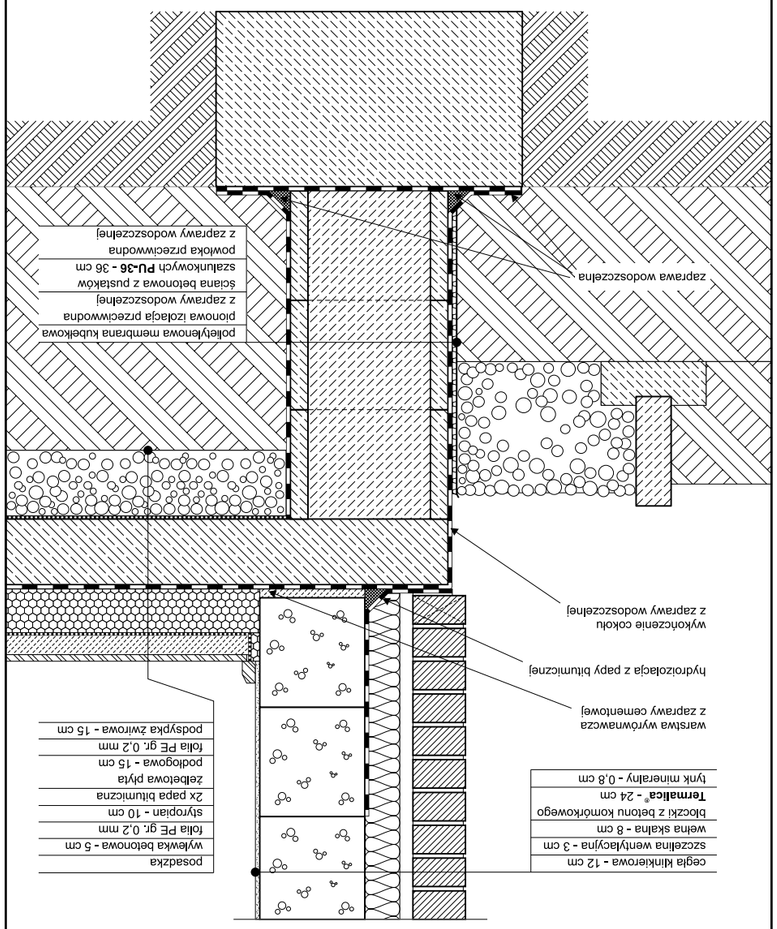

skala 1:10	PRZYZIEMIE BUDYNKU ŚCIANA TRÓJWARSTWOWA PODŁOGA NA GRUNCIE	BRUK-BET TERMALICA
nr rysunku 3-01		

www.termalica.pl

BRUK-BET® PARTNEREM

BRUK-BET® SP. Z O.O
NIECIECZA 199
33-240 ŻABNO

e-mail:
biuro@bruk-bet.pl

infolinia:
+48 14 644 44 44